ISTANBUL TECHNICAL UNIVERSITY ★ GRADUATE SCHOOL OF SCIENCE ENGINEERING AND TECHNOLOGY

MODELING AND SIMULATION OF VARIABLE DISPLACEMENT VANE PUMP IN DIESEL ENGINE LUBRICATION SYSTEM

M.Sc. THESIS

Eyüp ÇELEBİ

Department of Mechatronics Engineering

Mechatronics Engineering Programme

Thesis Advisor: Asst. Prof. Dr. Pınar BOYRAZ

JUNE 2013

ISTANBUL TECHNICAL UNIVERSITY ★ GRADUATE SCHOOL OF SCIENCE ENGINEERING AND TECHNOLOGY

MODELING AND SIMULATION OF VARIABLE DISPLACEMENT VANE PUMP IN DIESEL ENGINE LUBRICATION SYSTEM

M.Sc. THESIS

Eyüp ÇELEBİ
(518101017)

Department of Mechatronics Engineering

Mechatronics Engineering Programme

Thesis Advisor: Asst. Prof. Dr. Pınar BOYRAZ

JUNE 2013

İSTANBUL TEKNİK ÜNİVERSİTESİ ★ FEN BİLİMLERİ ENSTİTÜSÜ

DİZEL MOTOR YAĞLAMA SİSTEMİNDE DEĞİŞKEN DEBİLİ PALETLİ POMPA MODELLEMESİ VE SİMULASYONU

YÜKSEK LİSANS TEZİ

Eyüp ÇELEBİ
(518101017)

Mekatronik Mühendisliği Anabilim Dalı

Mekatronik Mühendisliği Programı

Tez Danışmanı: Ast. Prof. Dr. Pınar BOYRAZ

HAZİRAN 2013

Eyüp ÇELEBİ, a **M.Sc** student of ITU **Institute of / Graduate School of Science Engineering and Technology** student ID **518101017**, successfully defended the **thesis/dissertation** entitled "**MODELING AND SIMULATION OF VARIABLE DISPLACEMENT VANE PUMP IN DIESEL ENGINE LUBRICATION SYSTEM**", which he prepared after fulfilling the requirements specified in the associated legislations, before the jury whose signatures are below.

Thesis Advisor :	**Asst. Prof. Dr. Pınar BOYRAZ** İstanbul Technical University	.....
Jury Members :	**Prof. Dr. Şeniz ERTUĞRUL** Istanbul Technical University	.....
	Prof. Dr. Eşref EŞKİNAT Boğaziçi University	.....

Date of Submission : 03 May 2013
Date of Defense : 03 June 2013

To my mother and father,

FOREWORD

I would like to thank to my supervisor Asst. Prof. Dr Pınar Boyraz who has given a chance for this master thesis and guidance during the whole thesis without her help this thesis would not be completed.

Also I would like to thank to oil pump supplier Pierburg and OFCA supplier Yinlun for their help to provide test data for the pump and OFCA.

Finally I wouldlike to thank to my parent for supporting me throughout my studies inspiring me on my whole life.

June 2013

Eyüp ÇELEBİ
(Mechanical Engineer)

TABLE OF CONTENTS

Page

ABBREVIATIONS

CAE	**:** Computer Aided Engineering
CO_2	**:** Carbon dioxide
HLA	**:** Hydraulic Lash Adjuster
ICE	**:** Internal Combustion Engine
LR	**:** Line to Regulation chamber
NOx	**:** Nitrogene Oxides
OFCA	**:** Oil Filter Cooler Assembly
RE	**:** Regulation chamber to Exhaust
VDOP	**:** Variable Displacement Oil Pump
VDVP	**:** Variable Displacement Vane Pump

LIST OF FIGURES

Page

MODELING AND SIMULATION OF VARIABLE DISPLACEMENT VANE PUMP IN DIESEL ENGINE LUBRICATION SYSTEM

SUMMARY

In global life the energy consumption is rising up rapidly due to the remarkable increase in the number of people and machines. In today's world reducing energy consumption in all engineering systems is an important field of study. Following this trend one of the main researches on diesel engines is covering the reduction of fuel consumption. This can be achieved by improving the engine subsystems performance. One of these sub-system is the engine lubrication system that can be greatly improved. Recent studies have shown that conventional oil pump has a great influence on fuel consumption. It is found that especially using variable displacement oil pump (VDOP) contributes to the decrease on fuel consumption. However variable displacement oil pumps have more complex geometries and operation principle therefore design of a VDOP is quite difficult. Both in design and in modification stages it is not easy to understand the pump characteristics without performing experiments. In vane pump, even the smallest designing parameters i.e. spring stiffness have great influence on the pump's performance. Performing the tests for every design parameter is not possible or practical. Like the most of the engineering systems, the computational methods and/or modelling provides a better understanding of the system performance in a faster and more flexible manner. 3D CAE tools offer a good solution in achieving comparable results with real world performance; however, modelling of the pump in 3D CAE tools is not quite fast in obtaining simulation results. In addition too long simulation times and effort in 3D modelling, precision of results obtained from 3D tools mostly dependent on the meshing quality. On the other hand 1D analysis is being widely used as it supports engineering systems with quicker and reasonably precise results. Sub-parts of the VDOP can be listed as followings: Hydraulic set with control ring and rotor, restrictor, spool valve system with regulation spring. This thesis basically consists of one dimensional modelling of all sub-parts of the VDOP. The VDOP has been modelled using MATLAB/ SIMULINK. The basic parameters of the pump and operating speed is fed to the system and pump response including intermediate variables of sub-components such as pump outlet pressure, flow rate etc. can be taken as output of the model.

The developed model has been verified with a conventional linear speed input. The system firstly fed with a speed profile which increases linearly. Consistent results have been obtained from all of the sub-components with the conventional VDOP characteristics.

Moreover an engine dynamometer test has been run and main gallery pressure data which is the main output and system response of the VDOP has been recorded for 600 seconds with a determined speed profile. The same inputs have been given to the model and results have been validated with the test data.

DİZEL MOTOR YAĞLAMA SİSTEMİNDE DEĞİŞKEN DEBİLİ PALETLİ POMPA MODELLEMESİ VE SİMULASYONU

ÖZET

Günümüzde insan sayısının ve makinlerin artmasına paralel olarak enerji ihtiyacı da hızla artmaktadır. Bütün mühendislik sistemlerinde harcanan enerjinin azaltılması ile sistemlerin daha az enerji ile aynı işi yapabilmesi bir çok araştırmacı ve mühendisin önemli bir çalışma alanını oluşturmaktadır. Bu mühendislik sistemlerinden bir tanesi de dünya üzerinde bir çok araçta kullanılan dizel motorlardır. Yeni nesil motorlar üzerinde daha az yakıt tüketimi sağlamak üzere çeşitli araştırmalar yapılmaktadır. Ancak dizel motorların performansları da çok önemli olduğu için yakıt tasarrufunda yapılan geliştirmelerin motor performansına olumsuz yönde etkilememesi gerekmektedir. Dizel motorlarının yağlama sistemi de yakıt tüketimi açısından geliştirilmesi gereken bir alt sistemdir. Geleneksel sabit debi veren yağ pompaları çok fazla yakıt tüketimine sebep olmaktadır. Diğer taraftan değişken debi verebilen yağ pompaları hem sistemin gerektirdiği yağ debisini sağlayabilmekte hem de daha az enerjiye ihtiyaç duymaktadır. Ancak değişken debili pompalar geleneksel sabit debili pompalara göre daha kompleks geometrilere sahip olduğu için tasarımı çok daha zordur. Hem ilk tasarım aşamasında hem de daha sonra ki tasarım değişiklikleri sırsanında pompanın karakteristğini öncenden kestirebilmek zordur bu nedenle de system tanılama yapılmaktadır. Bu tezin konusu olan değişken debili paletli pompaların karakteristiği kullanılan yayların yay sabiti, yağ özellikleri gibi önemsiz görünebilecek parametrelerden etkilenerek tamamen değişmektedir. Yapılan her değişikliğin veya yeni bir tasarımda sistem parametrelerinin performansa etkisini görmek için test yapmak çok maliyetlidir ve neredeyse imkansızdır. Birçok mühendislik sisteminde olduğu gibi üç boyutlu analiz programları değiken debili pompaların akışkan analizlerinde de kullanılmaktadır. Ancak üç boyutlu analiz programlarından çıkacak sonuçların kalitesi yapılan ağlama kalitesine bağlıdır. Paletli pompalar karmaşık geometriye sahip olduklarından iyi ağlama (meshing) yapılabilmesi büyük uğraşlar gerektirmektedir. Bu tezde değişken debili bir paletli pompanın tek boyutta MATLAB/SIMULINK programı kullanılarak modellemesi konusu ele alınmıştır.

Pompanın karakteristiğini etkileyen fiziksel parametreleri ve operasyon hızı modelin girişine beslenmektedir. Sisteme girilen fiziksel paramatreler öncelikle sistemde oluşan yağ debisini hesaplama bloğuna girmektedir. Bu blokta pompanın geometrik boyutlarına ve dönme hızına bağlı olarak oluşan debi hesaplanmaktadır. Bunun yanında bu bloğa kontrol halkasının konumu (ekzantrikliği) de geri beslenmektedir. Ancak ilk çalışma anında geri besleme henüz olmadığı için pompa maksimum ekzantrisitede çalışmaya başlamaktadır. Bütün hidrolik sistemlerde olduğu gibi pompanın ürettiği debi miktarına sistemde bir basınç oluşmaktadır. Motorun anagalerisinde oluşan basınç karakteristiği yağın ana galeriden sonraki motor alt sistemleri üzerindeki basınç düşümüne eşittir. Sistemde sistemin basınç karakteristiği yapılan yağlama sistemi deneyi ile modellenmiştir. Buna göre pompa belirli hızlarda

çalıştırılarak sisteme gönderilen debi ve ana galeride ölçülen basınç ölçülmüştür. Ölçülen basınç değerleri hacimsel debi ile ilişkilendirilerek, modelin ilk bloğunda hesaplanan hacimsel debi ile motor anagaleride oluşan yağ basıncı modellenmiştir. Ayrıca yağ pompadan çıktıktan sonra ana galeriye gelmeden önce soğutulup filitrelenmektedir. Bu nedenle pompanın çıkışındaki basıncın hesaplanabilmesi için pompanın ürettiği akışın soğutucu ve filitre üzerindeki oluşturduğu basınç düşümü de modelde ayrı bir blok içerisinde modellenmiştir. Soğutucu ve filitre üzerinde oluşan basınç düşümünü modellemek için öncelikle soğutucu ve filtre modülü üzerinde basınç ve debi ölçerler ile enstrumante edilmiş test sistemine entegre edilmiştir ve üzerinden değişik debilerde yağ geçirilerek modül üzerinde oluşan basınç değerleri kaydedilmiştir. Pompanın ürettiği akış kontrol halkasının iki tarafına iletilerek kontrol halkası üzerinde kuvvet dengesi sağlanmaktadır. Ana galerideki akış pompaya bir boru yardımı ile geri beslenmektedir. Geri beslenen akış pompa içerisindeki valfe basınç uygulamaktadır. Basınç değeri belli bir değeri geçtiğinde valf ve kısıtlayıcı üzerinden akış geçmektedir. Yağın pompa çıkışından valfe çıkışına doğru akışı sırasında kısıtlayıcı üzerinde basınç düşümü oluşmaktadır. Kısıtlayıcı üzerinde oluşan basınç düşümü kontrol halkası üzerindeki kuvvet dengesini değiştirmektedir. Ancak pompanın çıkışından valf çıkışına kadar olan kanalda hem kısıtlayıcı hem de valf çıkışı üzerinde basınç düşümü oluşmaktadır.Valf çıkışı üzerinde oluşan basınç düşümü valfin hareketine bağlı olarak değişmektedir. Valf açıklığının artması ile valf üzerindeki basınç düşümü de azalmaktadır. Dolayısı ile kısıtlayıcı üzerindeki basınç düşümü ile valf çıkışı üzerindeki basınç düşümleri ters orantılı bir ilişkiye sahiptir. Kısıtlayıcı üzerindeki basınç düşümünü hesaplamak için pompa çıkışındaki basınç kısıtlayıcı ve valf çıkışı üzerindeki basınç toplamına eşit kabul edilmiştir. Her iki alt sistemden geçen akış miktarı aynı olduğu için akış denklemlerine göre basınçlar modellenmiştir. Hesap edilen kısıtlayıcı üzerindeki basınç düşümü kontrol halkası üzerindeki kuvvet dengesinde kullanılmak üzere çıkış alınmıştır.

Belirtildiği gibi valfin konumu valf çıkışı üzerinde oluşan basıncın değişimine etkilemektedir. Valfin tamamen kapalı olması durumunda valf üzerinde akış oluşmamaktadır. Kısıtlayıcı üzerinde oluşan basıncın hesap edilebilmesi için valfin konumunu bilmek ve yukarıda bahsedilen bloğun girişine beslenmesi gerekmektedir. Bunun için valf hareketi ikinci derecede kütle-yay-damper ile modellenmiştir ve elde edilen valf konumu kısıtlayıcı üzerindeki basınç düşümünü hesap edildiği bloğa beslenmiştir.

Kısıtlayıcı üzerindeki basınç düşümü pompa çıkış basıncıncan düşürülerek kontrol halkasının her iki tarafında oluşan yağ basınç kuvvetleri belirlenmiştir. Bunun yanında kontrol halkasına yağ sönümleme ve yay kuvvetleri etkilemektedir. Bu nedenle kontrol halkasının pozisyonu ikinci dereceden kütle yay-damper ile modellenmiştir. İkinci dereceden sistemin çözümlemesi yapılarak her bir noktada kontrol halkasının pozisyonu yani ekzantirikliği belirlenmiştir. Hesap edilen ekzantiriklik değeri pompanın ürettiği yağ akışı miktarı için çok kritik bir öneme sahiptir. Pompanın ekzantirikliği arttıkça sisteme gönderdiği (sabit hızda) akış debisi yükselmektedir ancak ekzantiriklik azaldıkça yani konsantirikliğe yaklaştıkça pompa daha düşük kapasiteli bir pompa gibi çalışmakta ve sisteme daha düşük debide akış göndermektedir. Ekzantiriklik değeri akış debisi hesaplaması yapılan modelin girişine gönderilerek doğru şekilde anlık olarak debi hesabı yapılması sağlanmaktadır.

Geliştirilen modele öncelikle lineer değişken bir hız profili uygulanmıştır. Başka bir deyişle sistemin girişine uygulanan hız profili sabit bir ivme ile artmaktadır. Sabit debili (geleneksel) bir pompa lineer hız profili ile çevrildiğinde pompanın verdiği debi pompanın deplasmanın her koşulda eşit olduğu için hız ile lineer değişim göstermesi beklenmektedir. Ancak değişken debili pompa belli bir basınç değerine kadar sabit debili pompa gibi lineer artarken bu basınç değerine ulaştığında pompanın geri besleme aldığı noktadaki basıncın değişmemesi beklenmektedir. Modele uygulanan lineer değişken hız profiline modelin verdiği basınç değerinin öngörülere uygun şekilde olduğu tespit edilmiştir. Bunun dışında sistemin bütün alt parçalarının karakteristiği geleneksel değişken debili pompa karakteristiğine uygun olduğu tespit edilmiştir.

Oluşturulan sistemin gerçeklenmesi için motor dinamometre testinden alınan veriler kullanılmıştır. Bu testte motor rolanti hızından 4000 rpm hızları arasında belirli yüklerde gezerek motorun dayanıklılığı test edilmektedir. Bu test sırasında motorun gerekli görülen alt sistemleri de enstrumante edilmektedir. Bu tesste motor yağlama sistemi ana galeri basınç, karter sıcaklık sensörleri ile enstrumante edilerek test süresi boyunca alınan veriler kaydedilmiştir ve on dakika boyunca alınan veriler modelin gerçeklemesinde kullanılmıştır.

Gerçekleme için öncelikle testin on dakika boyunca ziyaret ettiği hız değerleri modele beslenmiştir. Sistemin girişine uygulanan hız değerine karşı sistemden ana galeri basıncı, pompanın ürettiği yağ akış hacimsel debisi, valf hareketi (konumu), kontrol halkası pozisyonu(ekzantrikliği) hesaplanmış ve zamana göre değişimi çizdirilmiştir. Ana galeride oluşan basınç değeri testte ölçülen değerle karşılaştırılıp modelin gerçek değerle uyumlu olduğu tespit edilmiştir. Ancak düşük hızlarda hesaplanan ve ölçülen değer arasındaki var yüksek devirlere göre daha yüksektir. Bu da pompa içerisindeki boşluklardan ve palet ile kontrol halkası arasından pompa girişine kaçan yağların belirli bir hacimsel debi kaybına neden olmasıdır. Bu çalışmada hacimsel kayıplar modellenmediğinden değişken debili pompanın lineer olarak çalıştığı bölgede yani hızın düşük olduğu bölgelerde gerçek değerden sapma daha yüksektir. geryağlama sistemi ana galerisi basınç sensörleri takılmıştır ve basınç ile motor hız değerleri kaydedilmiştir. Testte elde edilen hız profili modele uygulanarak ana galeri basınçları gerçek veriler ile karşılaştırılarak sistem doğrulanmıştır.

1. INTRODUCTION

In recent years there has been a remarkable increase on the energy demand on the engineering systems. This increase on the energy consumption inspires engineers to design systems with lower energy requirement. Lubrication system of the internal combustion engines (ICE) is one of the engineering systems which has a considerable effect on the fuel consumption on the ICEs. Lubrication system has a cruical importance in the ICEs. Existence of the lubricant in ICEs provides not only friction and wear reduction on contacting surfaces but also sealing, cooling, cleaning, corrosion reduction, transmission of forces i.e. Hydraulic lash adjusters (HLA)[1]. Since the first ICEs, positive displacement oil pumps have been used in the lubrication systems to supply the oil to the engine components. Positive displacement pumps can be further investigated under two categories: Fixed displacement pumps and variable displacement pumps. Fixed displacement oil pumps which have been widely used in ICEs, supplies same amount of oil at each operating speed thus theroretically has a linear relation between pump speed and oil flow rate. Since the oil flow rate is constant the oil pump needs to be designed depending on the worst case condition which is maximum clearance system components working at lower speed at higher temperatures. This worst case scenario causes oil pump to deliver more oil flow to the system than it is required by the system components. The pumping of unrequired oil to the system causes pump counter pressure to increase. This increase on the counter pressure has two main adverse effects. One of these effects is the decrease on the volumetric efficiency due to the increase on the oil leakage through the clearances to the inlet of the oil pump. The other adverse effect is the increase on energy consumption due to the increase on the load. When the pump operates at high load it needs/consumes more energy. This increase on the energy consumption causes not only deviate from fuel economy but also emission targets. On the other hand variable displacement oil pumps let the engineers & designers to meet the engines oil demand requirements by changing its volumetric displacement. At the design stage of a variable displacement oil pump the required pressure where the pump gets feedback should be determined at engine

operating conditions. Hydraulic VDOPs have hydraulic feed back to the pump which works as a measurement in control engineering since the pressure feedback causes to move a spring with a known spring coefficient. By the provided feedback, pump regulates its eccentricity and unlike the FDOPs, VDOPs regulates the pressure by changing the eccentricity so thus the volumetric displacement. Regulating the pressure at a pre-set value prevents oil pump to work under high pressure operating conditions, so the pump requires less energy to operate.

1.1 Purpose of The Thesis

VDOP has various parameters which affect its performance and robustness. All of the parameters should be selected after necessary engineering calculations to design the pump which operates in predefined operating conditions since in case of an incorrect selection of any parts the either the pump will not operate in requested operating range or catastrophic failures will happen which may then cause engine to fail. It is very difficult to design a pump with hand calculations. Engineers usually use CAE programs to understand the effect of changing parameters on the design. Although CAE tools are very useful and simulations should be performed using them, it is difficult and time consuming to run a CAE model for every design change. The main purpose of this thesis is to establish a robust variable displacement oil pump model which will have interchangeable parameters to let not only to initiate new compact designs but also modifications on the older versions of the designs. The model proposed in thesis will provide a quick and easy way for computing the pump parameters to understand the relation between the pump's pressure and volumetric displacement characteristics.

1.2 Background

Since early ages, the lubrication has been a must for mechanical components. Main purpose of the lubrication is to decrease the friction and wear on the components especially on contact surfaces. In addition to that, cleaning, cooling, sealing are the most important functions of the lubricants in the engine. Most of the engine components such as main bearings, cam bearings as well as turbocharger bearings are working under high operating loads and/or speeds.

Since the absence of the lubricant will cause catastrophic failures on the bearings, lubricants should be delivered to the region in a few seconds. Lubrication regimes can be explained with Stribeck curve for lubrication between two surfaces including bearings. Figure 1.1 shows the famous Stribeck curve.

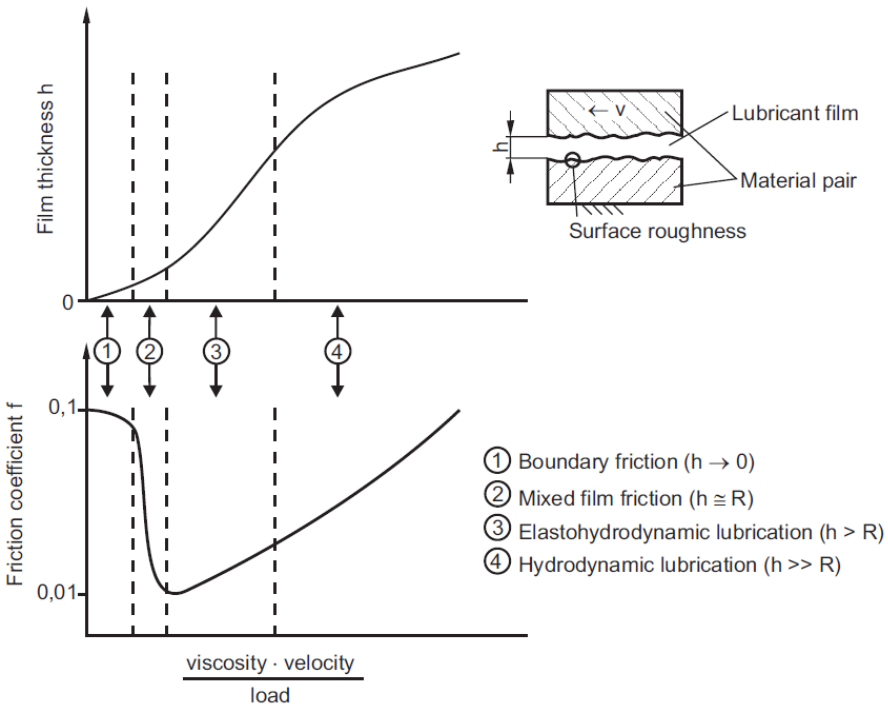

Figure 1.1 : Lubrication regimes with stribeck curve [2].

As seen from above illustrated in Figure 1.1 Stribeck curve basically determines the friction dependent oil viscosity times speed over bearing pressure. The first region which is called boundary lubrication represents the first movement/rotation of the bearings from stationary position that means the two components are separated by only a molecular lubricant layer thus the friction coefficient is very high. In the following region that is mixed film lubrication with increasing rotation speed the lubricant film thickness increases and friction coefficient decreases. Friction passes through to a minimum value and then increases due to the internal friction with a higher film thickness [2]. Finally in the hydrodynamic region a thicker film is formed with the increasing speed. At this region the friction increase is mostly caused by the shear forces on the lubricant [3]. Since the coefficient of friction on the Stribeck curve is a combination of viscosity, velocity and the load; each of them has a certain effect to the other so the lubrication type at the operating conditions usually changes especially between 2-3-4 regions.

Figure 1.2 illustrates a basic lubrication of an internal combustion engine. Oil is evacuated from the sump/oil pan by the oil pump through the pickup pipe. Oil which enters into the pick-up pipe is leanly filtered by a strainer to prevent very big particles to be sent to the engine. Oil is then sent to the OFCA (Oil Filter Cooler Assembly) to supply cleaned and cooled lubricant to the system.

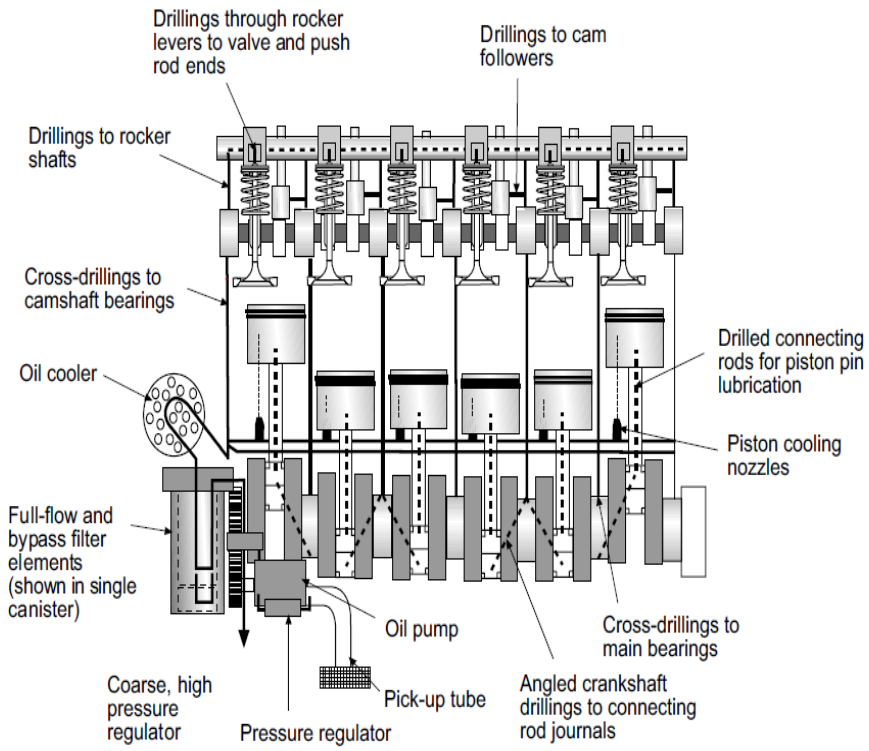

Figure 1.2 : Lubrication system of a typical internal combustion engine [1] .

Oil filters has a by-pass valve which operates to supply the even a dirty oil when the internal pressure of the filter increases and the oil supply to the engine is restricted. After the oil passes through the OFCA the pressurized oil is now ready to be supplied to the engine components from the main oil gallery. The pressurized oil distributed mainly to 3 subsystems which are main bearings through the drillings on the camshaft, pistons for cooling via the piston cooling jets, turbocharger bearings and the cylinder head including valve train components and cam bearings. The lubricant

which passes through the valve train not only lubricates the cam bearings but also provides hydraulic pressure to HLAs to control the valve motion by getting inside to the hydraulic lash adjusters' chambers. After the lubrication of the components is completed lubricant drain back from the passages (drain pipes) or drains through other components such as primary drive for cleaning and cooling purposes.

Lubricant should be supplied to the engine components which need oil to operate in a few seconds after engine is cranked. To provide required oil to the system, positive displacement pumps are used in the engine lubrication systems. Figure 1.3 shows the positive displacement oil pumps.

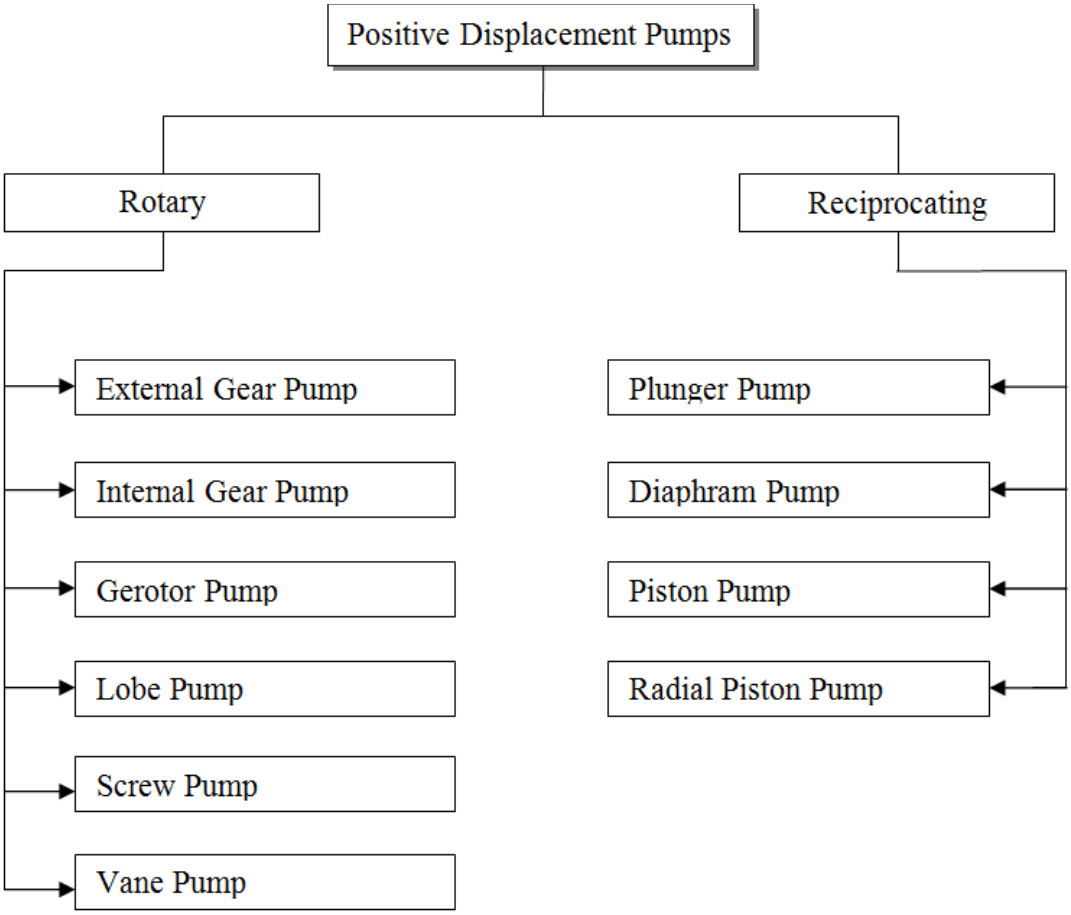

Figure 1.3 : Positive displacement oil pump types.

By definition rotary pumps deliver the fluid from one place to other place by rotation of a shaft. As most of the pumps used in engine lubrication system are driven by transmission of power by a belt or a chain from crankshaft rotation rotary oil pumps are used in engine lubrication system rotary type positive displacement oil pumps are used.

In conventional oil pumps such as external, internal and gerotor pumps, the displacement of the pump is fixed to a one design point as mentioned before. In theory, volumetric flow rate generated by the fixed displacement pumps is linearly proportional to the speed i.e. when the shaft of an external gear oil pump is rotated the pump starts to rotate and it transfers the oil from inlet port to the outlet port by

trapping the oil between adjacent teeth which means the volume between the volume between two adjacent teeth determine the volumetric displacement of the pump. As the volume between these two adjacent teeth does not change, external gear pumps deliver constant flow rate thus called as fixed displacement oil pumps. Theoretical flow rate of a fixed displacement oil pump can be calculated by equation (1.1). Figure 1.4 shows a fixed displacement oil pump theoretical oil flow rate characteristic depending on the engine speed.

$$Q = \frac{6{,}28 \cdot Area\_btw.\_teeth \cdot gear\_width \cdot pump\_speed}{60} \qquad \textbf{(1.1)}$$

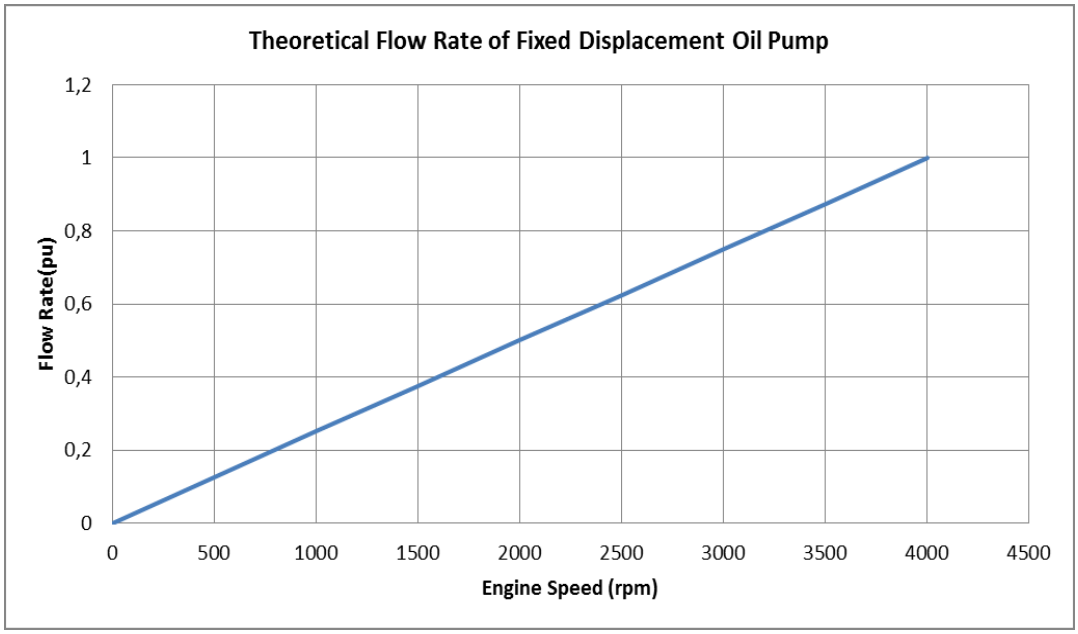

Figure 1.4 : FDOP theoretical dimensionless oil flow rate characteristic.

In this study all of the values are given in terms of pu (per unit values). Which is calculated by dividing the tested/simulated value of the parameter with it is nominal value.

As seen on Figure 1.4 fixed displacement oil pumps are theoretically expected to

engine speed. However, in practice, the flow rate does not have a linear dependence as there is leakage flow from pump outlet side to the inlet side through the pump clearances due to the increasing pressure at the pump outlet.

On the other hand variable displacement oil pumps are capable to deliver variable oil flow rate depending on the controlled pressure and regardless of engine speed. As the engine oil flow rate requirement does not have a linear relation having less flow by

referring to determined constant oil pressure at a certain point leads less power consumption as well as less CO2 and NOx emissions. Figure 1.5 shows the power consumption of fixed and variable displacement oil pumps.

In figure 1.5, lower curve represents the engine power requirement depending on the engine speed. Red area represents the waste power that is consumed during the delivery of oil to the engine by variable displacement oil pump. Higher curve represents the power consumption of traditional fixed displacement oil pump. In the lower speeds, consumption rates of both fixed and variable displacement oil pumps are same; however, at higher engine speeds, the power consumption of fixed displacement oil pump comparably higher than variable displacement oil pump power consumption [4].

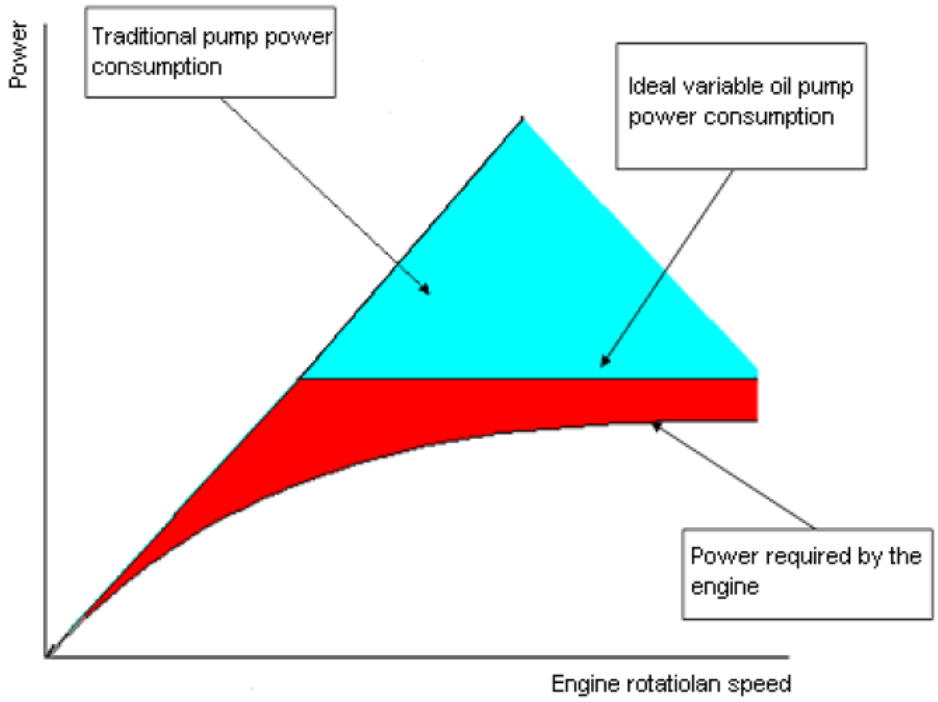

Figure 1.5 : Theoretical power consumption comparision of FDOP and VDOP [4].

From figure 1.5 it can be easily said that the power consumption will be lowered and fuel economy will be improved by usage of variable displacement oil pump. The contribution of variable displacement oil pumps on fuel economy increased the usage of them in IC engines especially in passenger and light duty vehicles.

Most commonly used variable displacement oil pump is the vane pump. Vane pumps can also be used as a fixed displacement pump when there is no feedback

from the system; however, vane pumps are rarely used as fixed displacement pumps since gear and gerotor pumps have more compact design that are able to be produced with relatively lower costs. In automotive industry, especially in lubrication system usually variable displacement type vane pumps are used. There are several vane pump types in the industry. Two types of them which are mostly used in lubrication system are pivot type and translation type variable displacement oil pumps. In pivot type vane pump eccentricity is changed by the rotation of control ring on a fixed pivot axis. On the other hand in translation type vane pumps the eccentricity is changed by translational motion of the control ring. These pumps are usually operated with only hydraulic feedback whereas hand there are VDOP pumps that are controlled with solenoid valves increasing fuel economy further. Integration and usage of solenoid valves are increasing cost so that are not in use frequently in engine lubrication systems.

Figure 1.6 show schematic view of a translation type vane pump which is very widely used design in automotive industry.

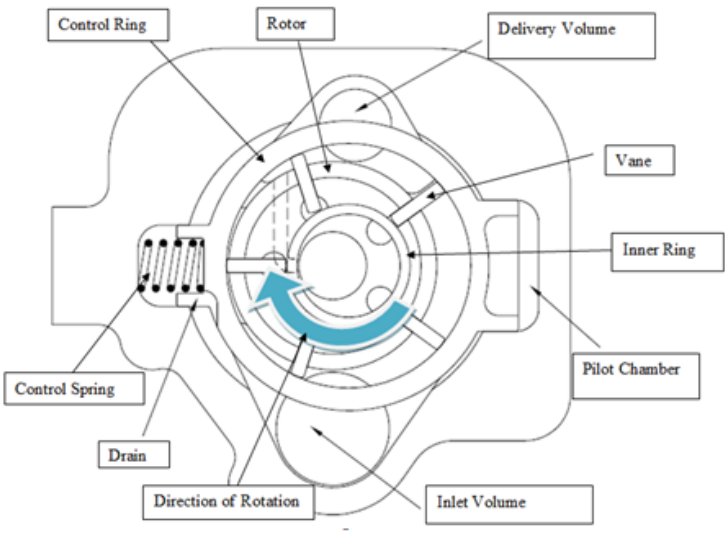

Figure 1.6 : Vane pump scematic view and basic components [5].

As seen in figure 1.6 a vane type oil pump basically consists of a rotor which rotates around a fixed axis to transfer the oil from inlet volume to outlet volume between two adjacent vanes. Control ring moves in x axis between maximum and minimum eccentricity. Control ring movement is controlled by force equilibrium of oil force on pilot chamber wall on the right hand side, control spring and oil force on the control spring chamber wall on the left hand side.

1.3 Background on Variable Displacement Vane Pumps

Modelling of variable displacement vane pumps are in interests of researchers and engineers due to the aforementioned certain outcomes on fuel economy.

Karmel [6] generated a dynamical model of pivot type variable displacement vane pump with a regulator and resistive load. To apply stability criterion for the pressure regulation circuit the generated model has been linearized. In his model by considering the motion of valve two operating modes are defined which are LR mode (regulation mode from Line to Regulation chamber) and RE mode (regulation mode from Regulation chamber to Exhaust). In LR mode the flow is regulated by transferring the fluid from main pressure line to regulation chamber however in RE mode the flow is regulated by transferring the fluid from regulation chamber to exhaust. Figure 1.7 shows Karmel's pressure regulation circuit of a VDOP [6].

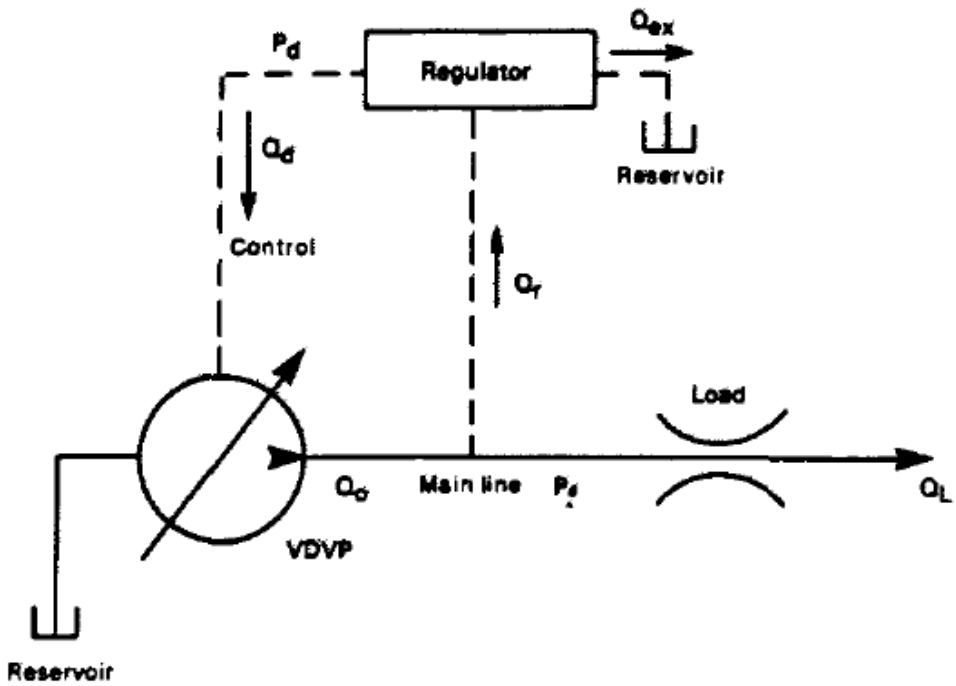

Figure 1.7 : VDOP pump hydraulic line model [6].

As seen in figure 1.7 hydraulic system consists of a VDVP (Variable Displacement Vane Pump) a load modelled with a restrictor and a regulator. Karmel showed that the system tends to be unstable with high line pressure, low eccentricity and high valve opening in RE mode. This study provided a unique opportunity to look at forecast issue with a wide range of model types and new clustering approach for model evaluation. Figure 1.8 shows pressure increase and eccentricity decrease effect

on the stability in both LR and RE modes.

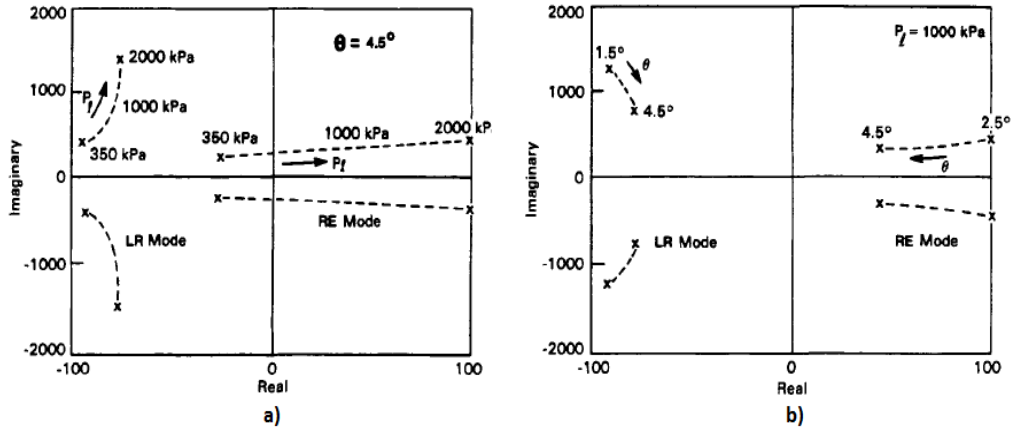

Figure 1.8 : a) Impact of line pressure b) Impact of eccentricity on stability [6].

Manco, Armenio et. al [5] developed a model of a translational type VDOP by evaluating geometric, kinematic and fluid dynamic properties of pump and fluid. They developed a kinematic analysis by evaluating vane position from rotor center to the vane's end point which is in contact with control ring. This kinematic calculation is integrated over a chamber to calculate the dynamically changing trapped volume between two adjacent vanes. Figure 1.9 shows variable radiuses and ray modulus as well as the infinitesimal area [5].

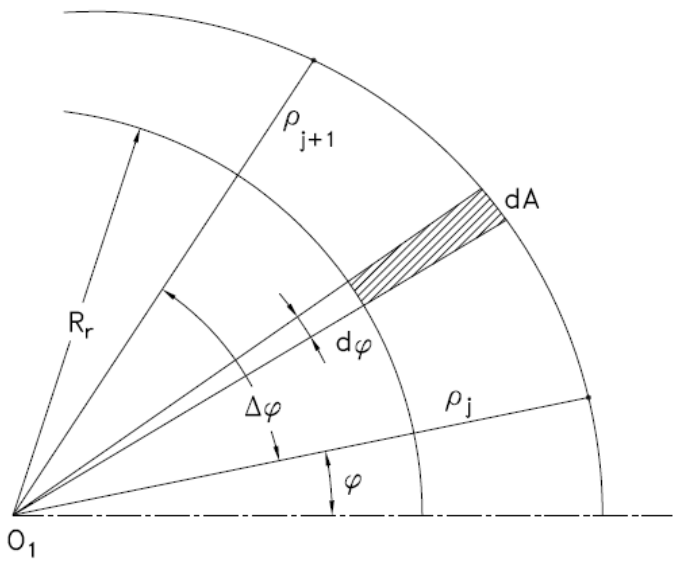

Figure 1.9 : Parameters to calculate the volume between two adjacent vanes [5].

Infinitesimal area has been calculated with the following equation.

$$dA = \frac{1}{2}(\rho^2 - R_r^2)d\varphi \qquad \textbf{(1.2)}$$

By integrating equation (1.2) volume of a single chamber has been derived. Forces acting on the control ring simplified into three components; oil force F_p due to chambers pressures, centrifugal forces F_{cv} due to the vanes, centrifugal forces F_{co} due to the oil in the chambers.

Moreover to determine the exact oil flow delivery the internal leakages between two adjacent vane tip and stator ring, between vane and pump case, between rotor and pump case , between vanes and slots have been calculated by using combination of Poiseuille and Couette approaches for flow between two infinite plates. Created model has been simulated in AMESim program. Figure 1.10 shows the comparision of experimantal (continous lines) and

simulation results(markers) for pressure and flow characteristics of VDOP. As seen in figure 1.10 a good alignment has been achieved between simulation and experimental results [5].

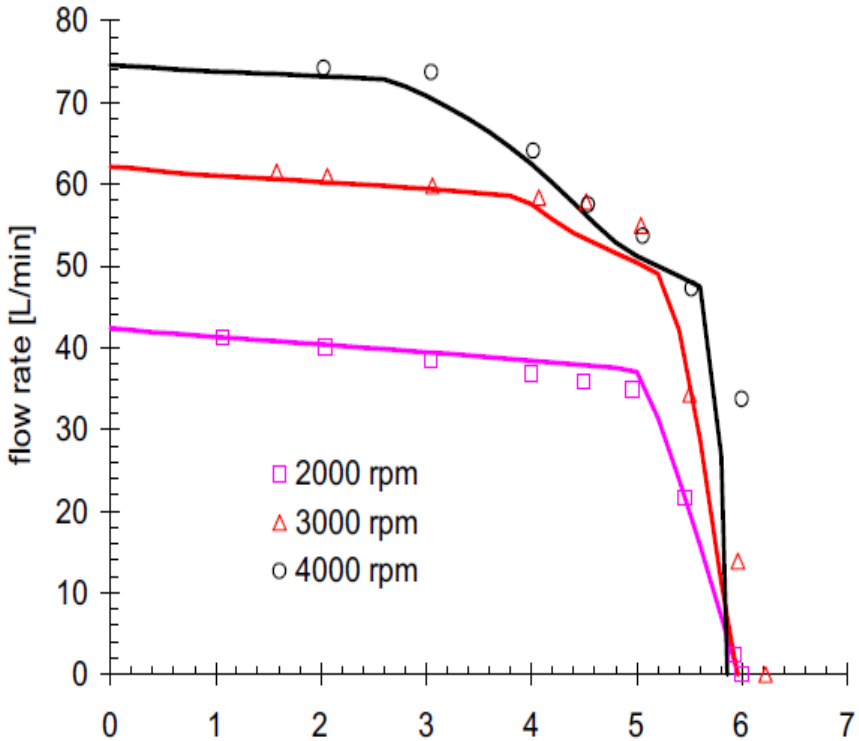

Figure 1.10 : Parameters to calculate the volume between two adjacent vanes [5].

Bianchini, Paltrinieri et. al represented an experimental and numerical study with a pivot type VDOP to determine the pressure distribution on the chambers of a VDOP with 7 chamber by applying continuity equation. Both experimental and numerical

studies were run in low, medium, and high engine speeds. Numerical simulation has been performed in AMESim tool by integrating the derived model into the tool. Figure 1.11 show the comparison of experimental and numerical results of the oil pressure inside the control ring in 360 deg. rotor angle [7].

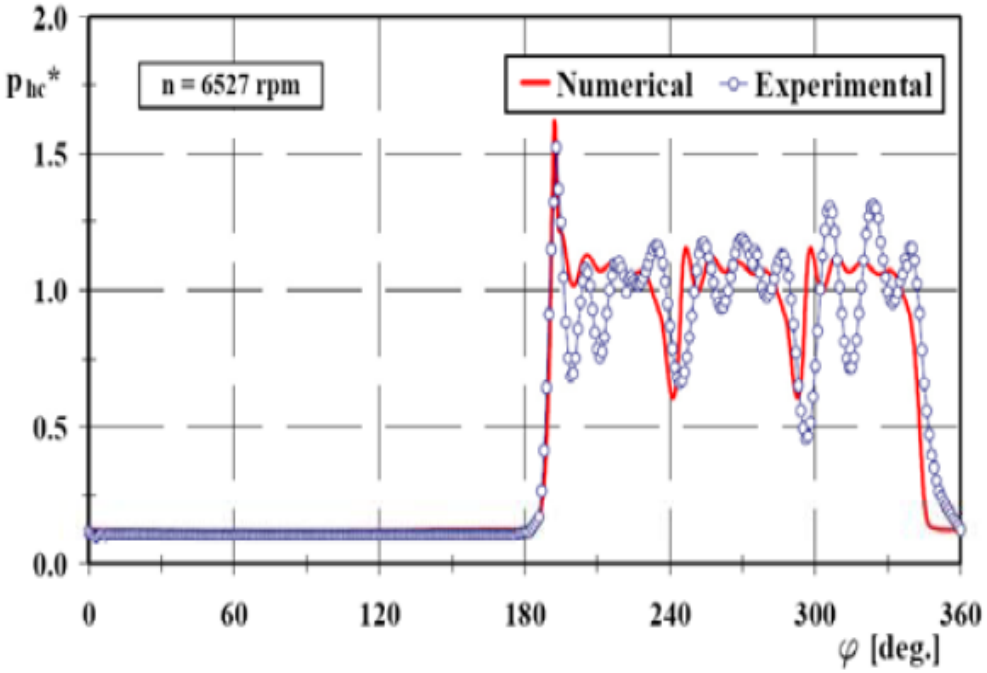

Figure 1.11 : Oil pressure distribution inside the control ring [7].

Authors derived also line pressure and line oil flow rates with respect to the pump speed and the results are well aligned with the experimental results. Figure 1.12 shows the numerical and experimental results of both mean delivery pressure and flow rate in a range of pump rotational speed [7].

Wang et. al developed a numerical model of a pivot type VDOP. Inputs of the vane pump kinetic motions have been derived from the CFD tool for each time step. At every new position of the control ring CFD model is re-meshed and oil flow rate results are numerically derived and a good alignment has been achieved with the experimental results at different engine speeds and different back pressures[8].

Barbarelli et. al developed a zero dimensional model of a VDVP in MATLAB/Simulink. Basically continuty equation was used to derive the flow and pressures. In this model the pressure losses are calculated proportional to the square

of the fluid flow rate. Figure 1.13 shows the developed MATLAB/Simulink model blocks.

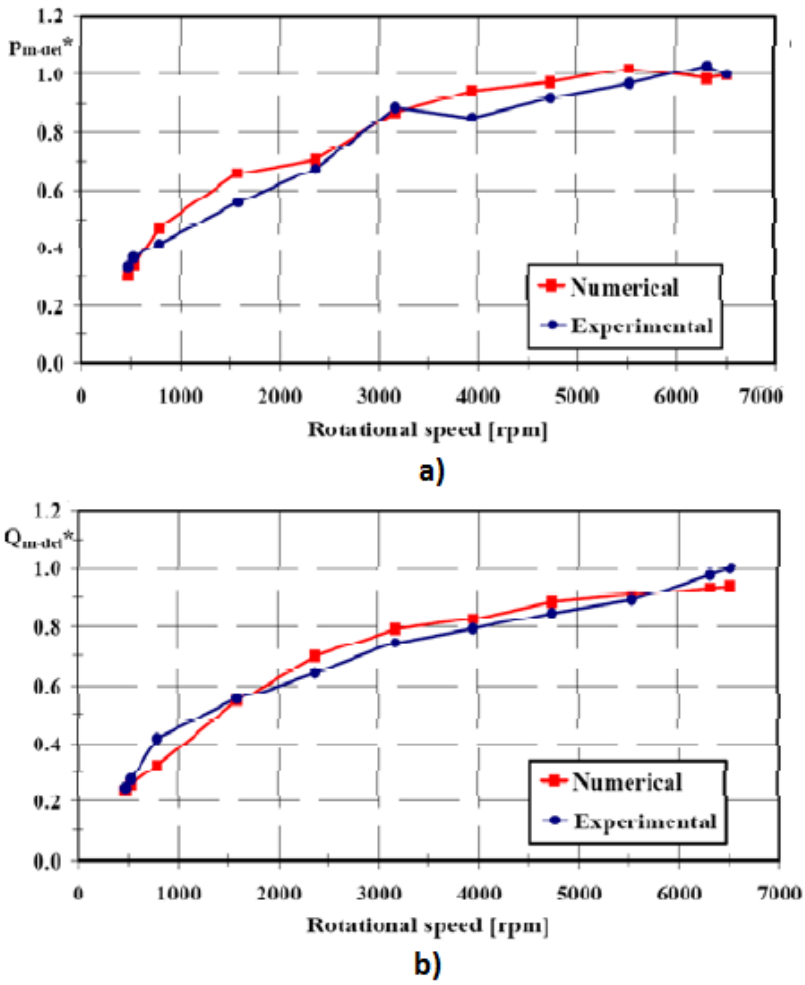

Figure 1.12 : Experimental and numerical results a) Pressure b)Flow rate [7].

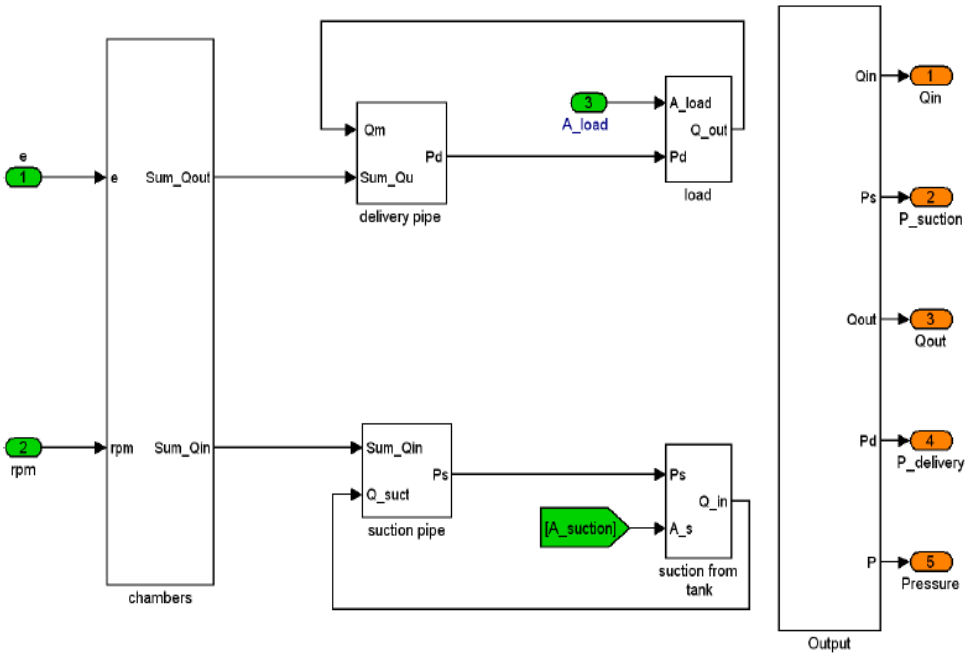

Figure 1.13 : MATLAB/Simulink model of zero dimensional VDVP [9].

Figure 1.14 shows an experimental and simulation results of the pressure distribution inside the control ring and delivery pressure of the pump.

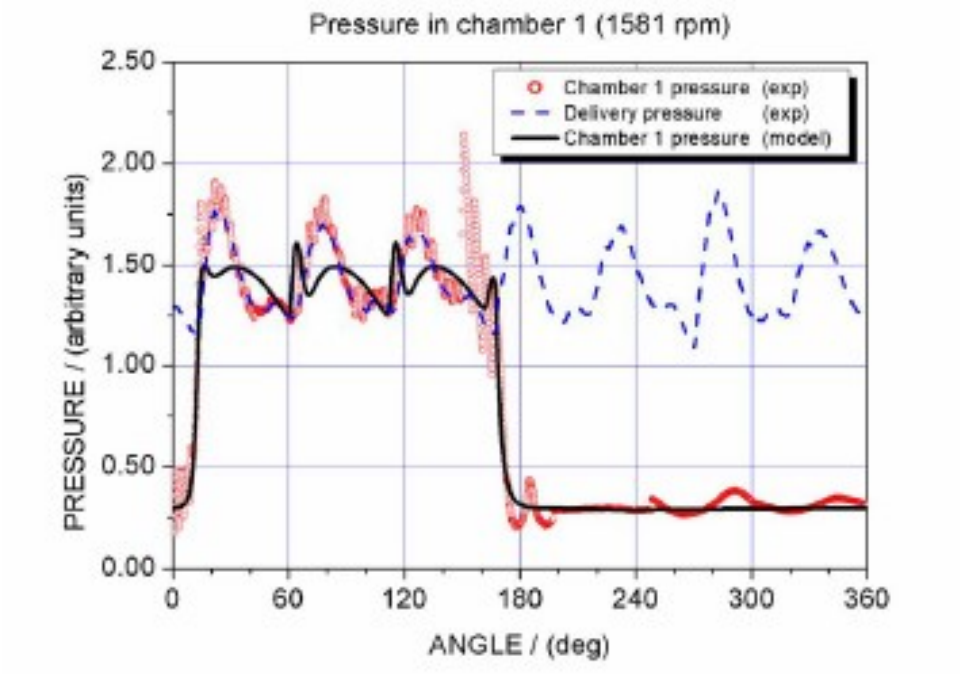

Figure 1.14 : Results of pressure inside control ring [9].

2. MODELING OF VARIABLE DISPLACEMENT OIL PUMP

2.1 System Background

In this study a variable displacement oil pump of a PUMA 3.2 L 200 PS 470 N-m Ford Duratorq TDCI I5 Diesel engine lubrication system is modeled. Figure 2.1 shows a simple scheme of the studied PUMA engine lubrication system. Pump is operated by a sprocket which is driven by crankshaft by transmitting the power with a chain.

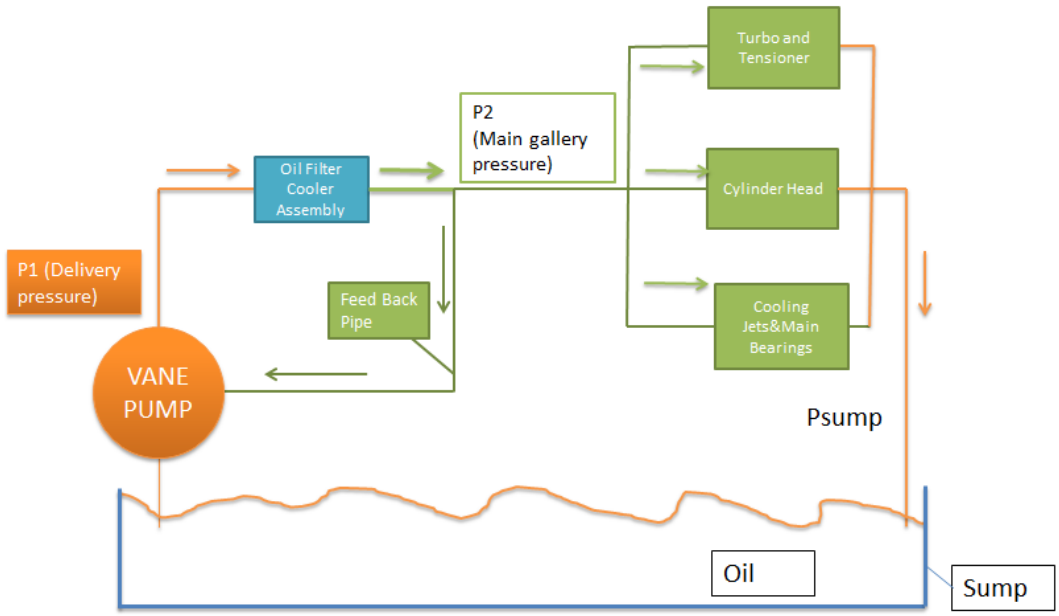

Figure 2.1 : Simplified scheme of engine lubrication system.

As seen on figure 2.1, oil is evacuated from the sump by the pump and pressurized oil is delivered to the Oil Filter Cooler Assembly(OFCA) to clean and cool the oil before sending it to the engine. The *P1* pressure represents the oil pump outlet pressure. When the oil passed through the OFCA pressure drops as a function of oil flow rate so that *P2* main gallery pressure is lower than pump outlet pressure. The oil delivery to the engine components are related with the main oil gallery pressure. Vane pump senses the pressure on main oil gallery by getting feedback to a spool valve and change the eccentricity to keep the pressure in a predetermined

value. The pressurized oil then distributed to the 3 main engine subgroups:

(1) Piston cooling jets& main bearings,

(2) Cylinder head,

(3) (3) Turbo bearings & chain tensioner sub-groups. The hot and contaminated oil is then sent back to the oil pan.

The studied oil pump which is used in the engine is a variable displacement oil pump. Figure 2.2 shows detailed view of the oil pump CAD view.

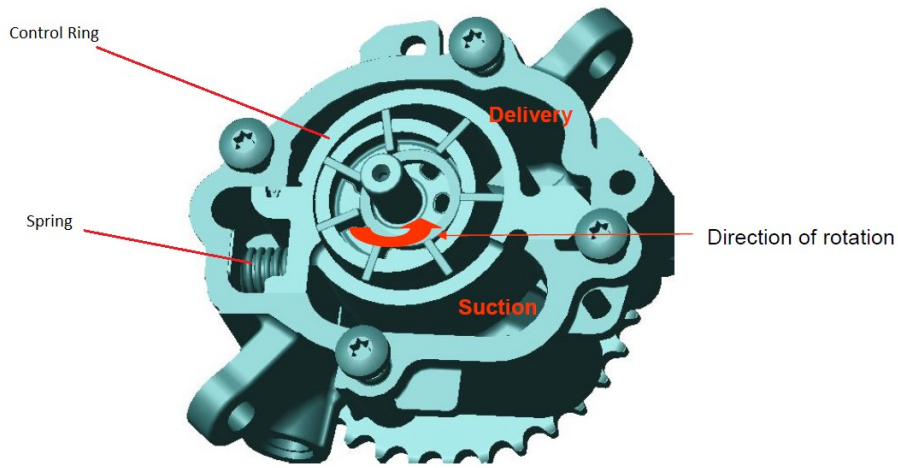

Figure 2.2 : CAD view of oil pump [10].

Pump has 7 vanes which rotate inside of a control ring at the axis of pump sprocket shaft centre. Control ring does only translational movement on the other hand rotor does only rotational movement. Spring on the left hand side provides a pre-load on the control ring to keep the control ring at the maximum eccentric position at lower operating speed until a pre-determined pressure set point.

As seen on figure 2.3 when the oil pressure at main gallery, P_g, reaches a pre-set value which is arranged by spool valve pressure regulation spring stiffness, spool valve lets oil to flow through orifice which causes pressure drop in the orifice. This pressure drop causes P_2 pressure to decrease and control ring moves to the right side to decrease the eccentricity thus the pump displacement.

This force equilibrium can be further expressed with the following equation in (2.1).

$$P_1 \cdot A_1 - P_2 \cdot A_2 - F_{spring\_pre} - k_{spring} x - b\dot{x} = m \cdot \ddot{x} \qquad \textbf{(2.1)}$$

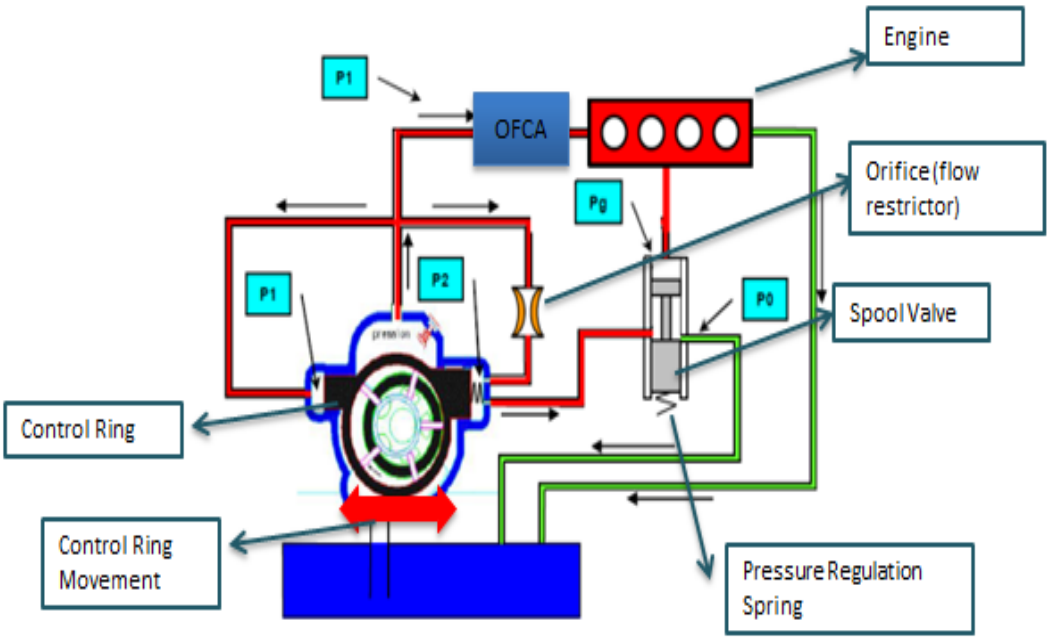

Figure 2.3 : VDOP pump operation scheme [10].

Where P_1 and P_2 are oil pressures exerting on pilot chamber wall area A_1 and sprinh chamber wall area A_2 respectively, F_{spring_pre} is the control ring sprin pre-load, b is the damping coefficient and m is the mass of the control ring. When the valve is in close position no flow passes through the restrictor so that P_1 and P_2 are equal and control ring position does not change.

2.2 Mathematical Modelling of Pump

As mentioned in the previous sections the pump provides oil flow to the system depending on the engine rotational speed. If all of the conditions such as studied system, circulated fluid properties (viscosity, temperature, bulk modulus etc.) etc. are constant, the oil flow rate delivered to the system is linearly proportional to the supplied oil pressure. At the scope of this project only VDOP will be modeled. To model the VDOP, firstly the flow rate delivered by the pump depending on engine speed and pump eccentricity will be calculated. Resulting oil pressure by the flow rate will be then calculated by modeling the engine as a restrictor as the pressure and flow rate is linearly proportional at a certain temperature. This relation has been obtained using the engine lube survey test results that is conduced at 110 ^{0}C oil

temperature. Similarly OFCA pressure drop will be calculated from oil flow rate and pressure relation by curve fitting to the OFCA rig test results.

As a first step the flow rate generated by the oil pump should be determined. Bo Li [11] has modeled and controled a vane pump for a valveless actuation system in this study the distance between the rotor center and the vane end point is identified with equation 2.2. Figure 2.4 shows the schemetic cross section of vane pump.

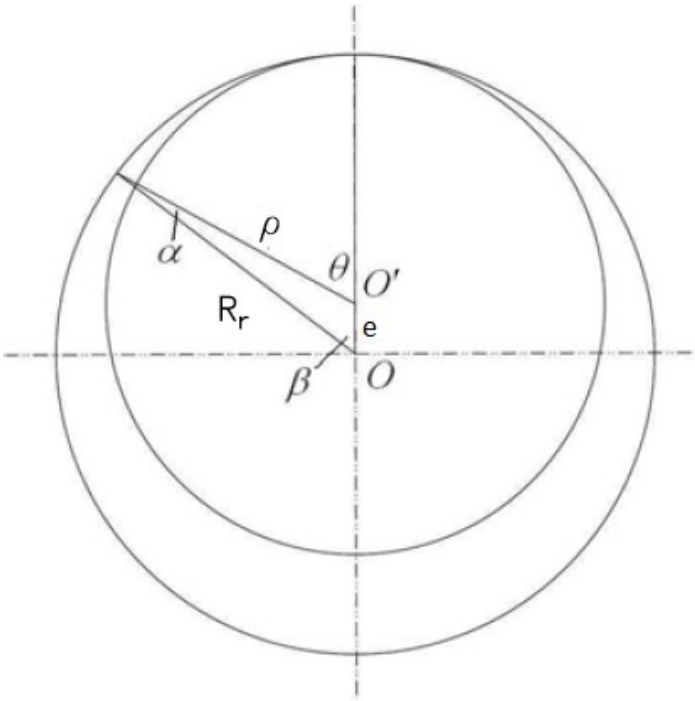

Figure 2.4 : Schematic crossection view of VDOP [11].

$$\rho(\theta) = \sqrt{\left(R_r^2 + e^2 - 2 \cdot R \cdot e \cdot \cos\left[\theta - \arcsin(\frac{e}{R_r} \sin\theta) \right] \right)} \tag{2.2}$$

The area between two adjacent vanes can be expressed as the sum of infinitesimal areas by comining equation 1.1 and 2.2.

$$A_{chamber} = \sum_{1}^{N} \frac{1}{2} \cdot \left[\left(R_r^2 + e^2 - 2 \cdot R \cdot e \cdot \cos\left[\theta - \arcsin(\frac{e}{R_r} \sin\theta) \right] \right) - R_r^2 \right] \cdot \Delta\theta \tag{2.3}$$

By the help of equation 2.3 volume of the chamber between two adjacent vanes can now be evaluated by multiplying the height of the control ring(H) with area of the chamber.

$$V_{chamber} = H \cdot \sum_{1}^{N} \frac{1}{2} \cdot \left[\left(R_r^2 + e^2 - 2 \cdot R \cdot e \cdot \cos\left[\theta - \arcsin(\frac{e}{R_r} \sin\theta) \right] \right) - R_r^2 \right] \cdot \Delta\theta \quad \textbf{(2.4)}$$

As the volume of 2 adjacent vanes are evaluated with 2.4 equation now we are able to determine the theoretical flow rate delivered by the pump into the system by accounting the pump rotation speed (n).

$$Q_{pump} = 2 \cdot \pi \cdot n(rpm) \cdot V_{chamber} \quad \textbf{(2.5)}$$

From equations 2.3, 2.4 and 2.5 it can be seen that flow rate is mainly dependent on the eccentricity and the rotation speed pump. When eccentricity decreases the flow rate decreases by the derived equations. On the other hand when the pump eccentricity decreases the flow rate decreases as the pump transfers the fluid from outlet port to the inlet port. This scenario occurs in every position of the control ring except when it is in maximum eccentric position. In the model this has been also taken into consideration by subtracting this portion from total delivered volume when the eccentricity gets lower than its maximum value.

Now, the flow rate delivered to the engine is evaluated in terms of pump design parameters and engine/pump speed and eccentricity. A relation between flow rate and pressure need to be determined. Going back to the figure 2.1 as seen the flow rate generated by the pump is split in to three ways.

All three sub-groups has different flow rates however have same pressure drop through them as the inlet and outlet pressures are same. To understand the pressure drop characteristic of the rest of the engine at different flow rates a relation between flow rate and pressure on the main gallery has been obtained from lube survey test which has been conducted at 110 deg. C.

Figure 2.5 shows the oil flow rate and pressure drop characteristic of the engine in pu values.

Derived equation has been integrated into the model to derive the main oil gallery pressure of the engine in other words the oil pressure drop on the rest of the lubrication system components at a certain oil flow rate which is calculated by the pump constant parameters and eccentricty.

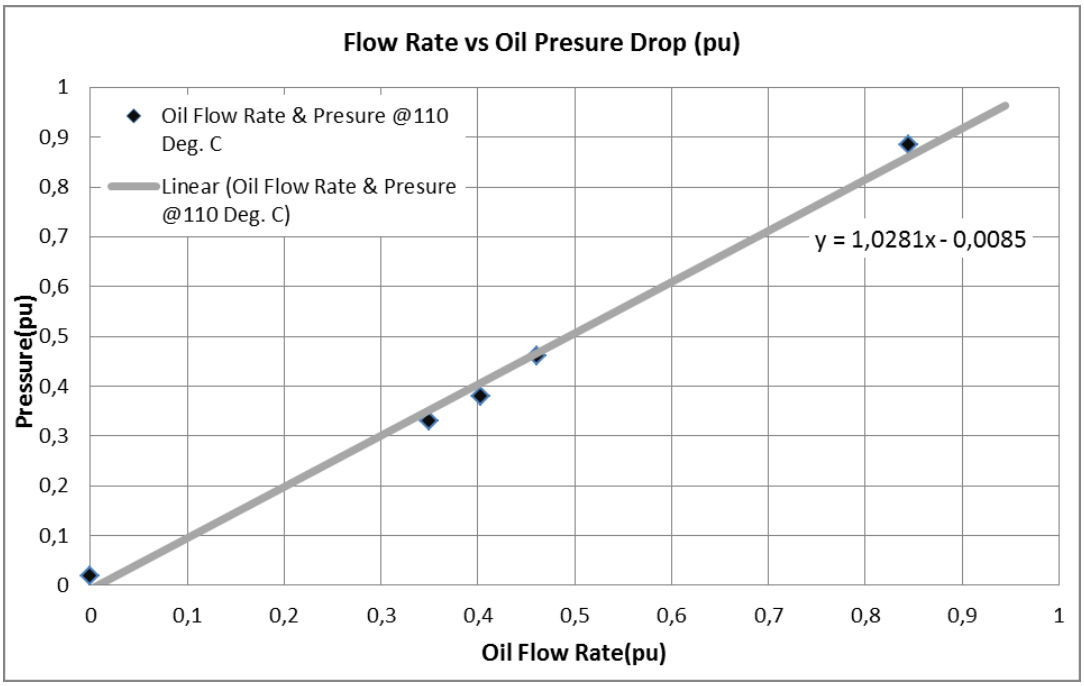

Figure 2.5 : Oil flow rate and pressure drop characteristic of lubrication system.

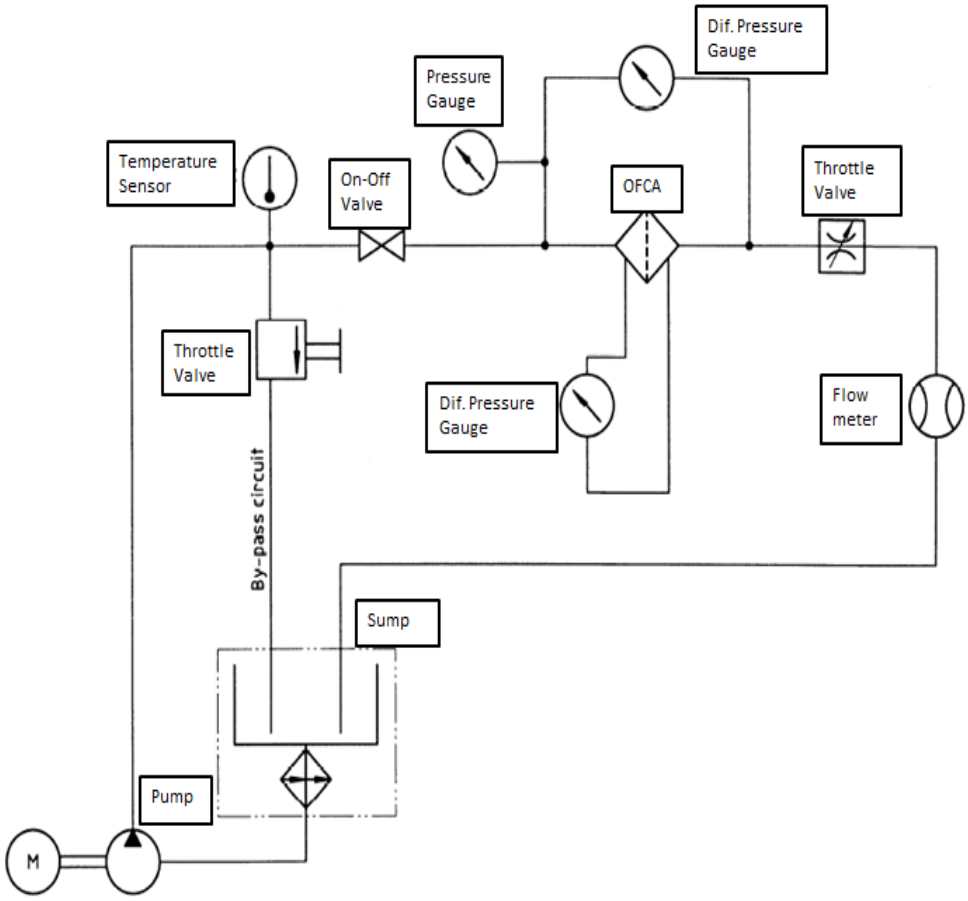

Figure 2.6 : OFCA pressure drop evaluation rig test scheme [12].

The tests have been conducted in 110 0C with 5W30 grade lubricant. Then the test has been repeated at different oil flow rate from 0.25 pu value to 1 pu value by changing pump motor speed.

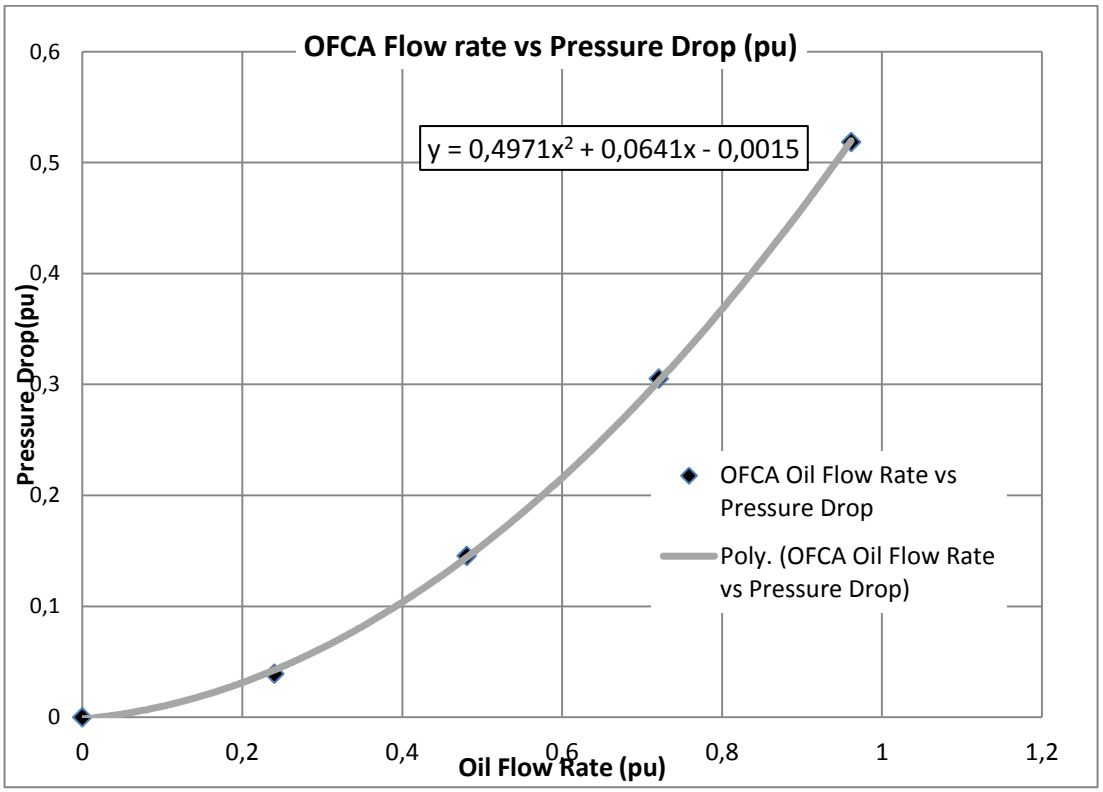

Figure 2.7 : OFCA oil flow rate vs pressure drop characteristic.

As seen in the figure 2.7, OFCA oil flow rate and pressure drop characteristic has been plotted and characteristic equation derived from this plot has been integrated to the model to evaluate the pump outlet pressure.

So far we have been able to determine flow and pressure characteristic of the required parts of the system. The main purpose of the VDOP is to regulate the main gallery pressure at a pre-set point. As mentioned at the previous sections this is achieved by the regulation spring which is seen in figure 2.3. At the normal operating conditions in every pressure increase spool valve moves to downward and compresses the regulation spring. When spool valve moves near the valve opening

the oil starts to flow through. Spool valve dynamics can be expressed with the equation 2.6 which is shown below.

$$P_g \cdot A_{spool} - k \cdot x - b_{spool} \cdot \dot{x} = m \cdot \ddot{x} \qquad \textbf{(2.6)}$$

In equation 2.6 P_g refers to the main gallery pressure which is required to be controlled, A_{spool} is the spool valve cross section area where the oil pressure creates a counter force to the spring.

Equation 2.6 is inserted in to the model and integrated two times to evaluate the valve opening distance (x).

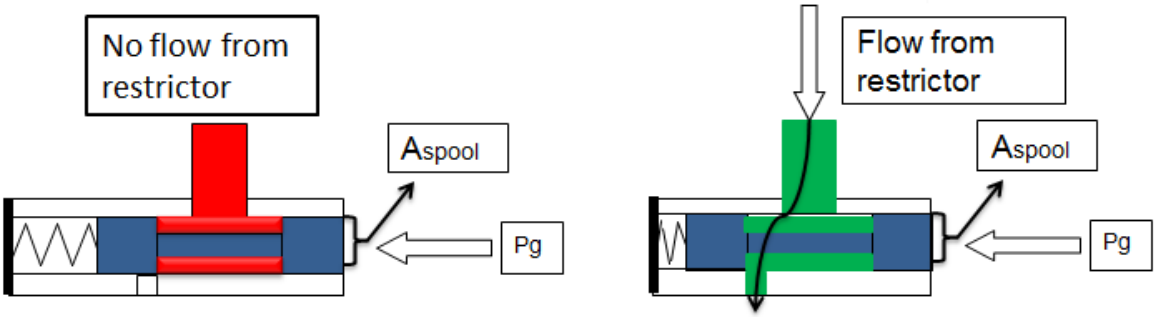

Figure 2.8 : Spool valve and control ring spring scheme: closed(left) open (right).

Spool valve opening hole area is another important parameter that affects the oil flow rate and pressure drop across the restrictor. Figure 2.9 shows the opening hole view with spool valve position.

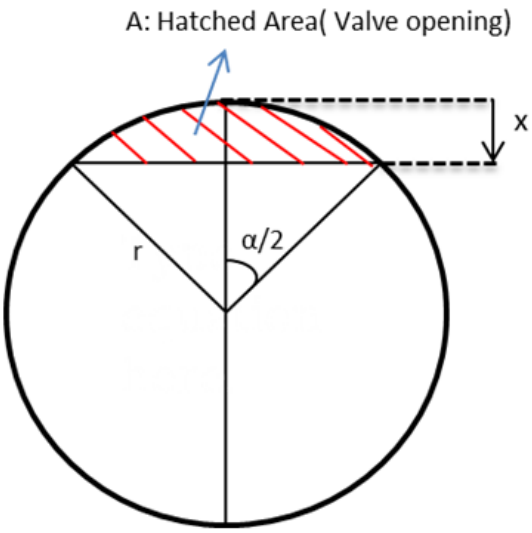

Figure 2.9 : Spool valve position and opening area schematic view.

In the literature [13] the valve opening area is determined geometrically by equation 2.7 and 2.8.

$$A = \frac{r^2}{2}\left(\alpha - \sin(\alpha)\right) \tag{2.7}$$

$$\alpha = 2 \cdot ar\cos\left(\frac{r-x}{r}\right) \tag{2.8}$$

Equation 2.7 and 2.8 are combined and used in the model to evaluate the valve opening area by taking the main gallery pressure as an input.

Calculated area is then used to derive the flow rate through the valve opening. The flow through the valve opening for small spool valve is given in the literature regardless of viscosity with equation 2.9[13].

$$Q = 3.12 \cdot 10^{-2} \cdot \sqrt{\Delta P} \tag{2.9}$$

As seen in equation 2.9 viscosity effects did not taken into account. Poisseulle flow equation for between two parallel plates is used to determine the flow rate on the valve opening instead of equation 2.9. Figure 2.9 shows the Poisseulle flow scheme between two plates.

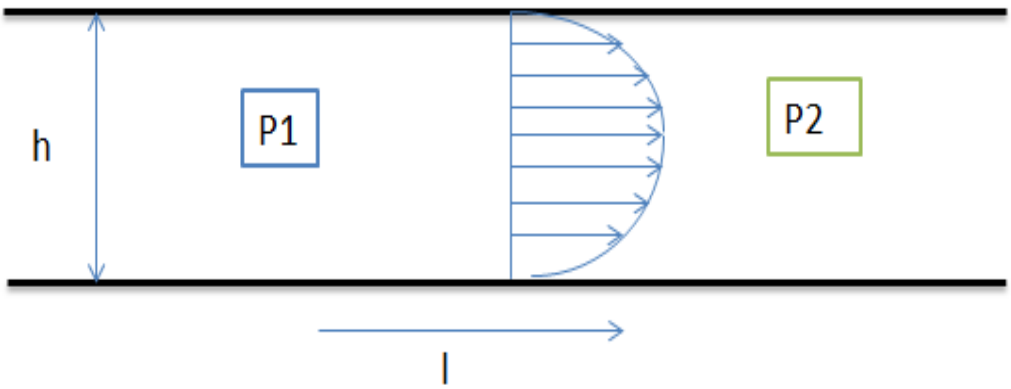

Figure 2.10 : Spool valve position and opening area schematic view.

In this study the spool valve position is taken as the height (h) between two plates, valve opening wall thickness is accounted as flow surface (l) and the valve opening circle cord due to the spool valve is stated as (b). Flow rate through the valve opening is calculated with Poiseulle flow which is shown in equation 2.10 [14].

$$Q = \frac{1}{12}\frac{b \cdot h^3}{\mu \cdot l} \cdot \Delta P_{valve} \tag{2.10}$$

Although equation 2.9 and 2.10 provide similar results in this working condition equation 2.10 is used as it can provide better results in case an extension of the study scope.

In the literature the oil flow rate of the restrictor which is shown in figure 2.3 is given by equation 2.11.

$$Q = C_d \cdot A\sqrt{\Delta P_{orifice} / \rho} \tag{2.11}$$

In equation 2.11 C_d stands for orifice discharge coefficient which should be determined experimentally.Von Mises and Wuest have determined the discharge coefficient depending on the Reynold's number conducting experiments to the sharp edged orifices. Von Mises is shown that the discharge coefficient for a sharp edged orifice is 0.611 and constant for the Reynold's number higher than 100 [13]. In this study the Reynold's number is well above than 100 so that the discharge coefficient determined by Von Mises has been used.

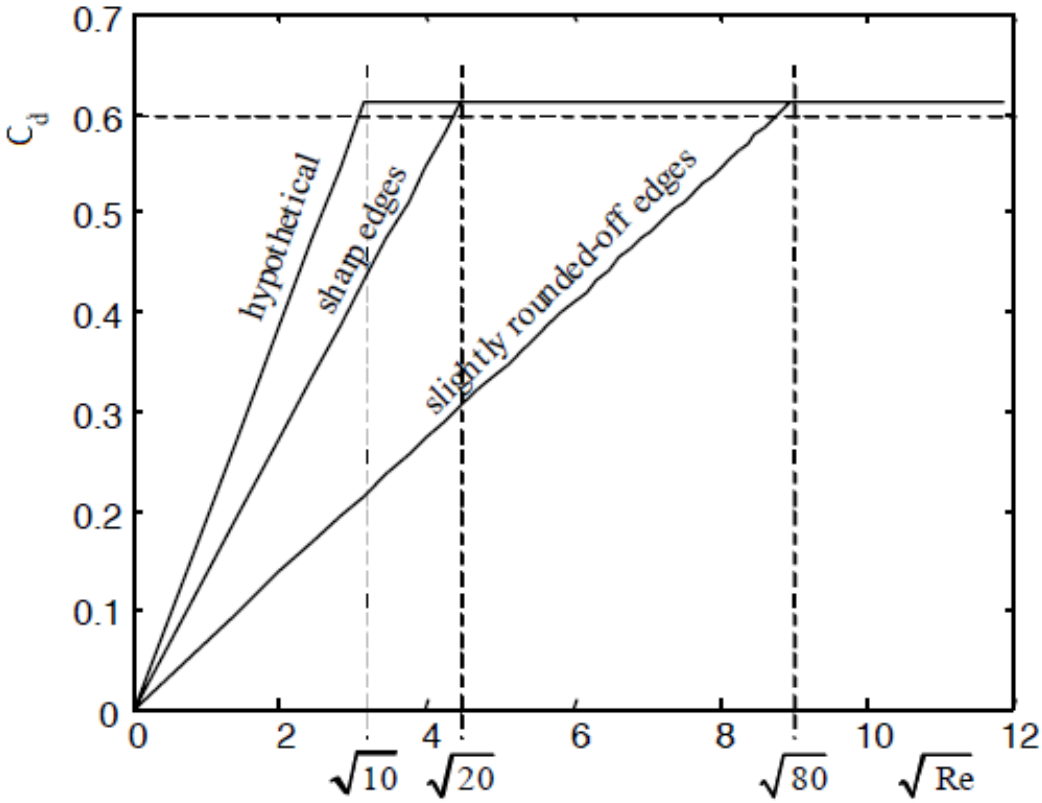

Figure 2.11 : Orifice disscharge coefficient and Reynold's number relation.

As mentioned previously to determine the force equilibrium in equation 2.1 the pressure drop through the orifice which is shown in figure 2.3 need to be determined. When the spool valve opens the oil flows through restrictor and exits the pump through the valve opening hole. Neglecting pipe flow losses and orifice and spool valve opening are the main places where the pressure drop is expected to occurs. As the pump outlet pressure have been determined regarding flow rate and pressure

relation for valve opening can be evaluated.. Since the valve opens to the atmosphere and the flow through the orifice and valve are equal equation 2.12 & 2.13 can be written by equating the phrases given in 2.10 and 2.11 as well as oil flow channel geometry.

$$\frac{1}{12}\frac{b \cdot h^3}{\mu \cdot l} \cdot \Delta P_{valve} = C_d \cdot A\sqrt{\Delta P_{orifice} / \rho} \qquad \textbf{(2.12)}$$

By considering oil flow channel geometry equation 2.13 can be written.

$$P_{Pump\_outlet} = \Delta P_{valve} + \Delta P_{orifice} \qquad \textbf{(2.13)}$$

Equations 2.12 and 2.13 have been integrated in to the model to evaluate the pressure drops on the orifice as well as on the valve opening.

Moreover the viscous damping coefficient for the spool valve indicated in equation 2.6 has been determined with the geometrical parameters [16].Equation 2.14 shows the viscous damping coefficient for the spool valve.

$$b_{spool} = \left[\frac{Contact\_Area \cdot Kinematic\_Viscosity \cdot Fluid\_Density}{ValvetoCylinder\_Clearance}\right] \qquad \textbf{(2.12)}$$

Since the pressure drop on the valve opening, orifice is determined and spool valve dynamics have been evaluated P_2 pressure in equation 2.1 is able to be found out so that the solution of equations 2.1 can be obtained. The solution of the equation gives the position of the control ring in other words the eccentricity of the ring. The equation is inserted to the MATLAB/Simulink block to find out both eccentricity and the velocity. The eccentricity information found out with equation 2.1 is then feed back to the flow rate evaluation block to calculate correct flow rate at dynamic working conditions. MATLAB/Simulink model will be further explained in next chapters.

2.3 Matlab/Simulink Model

In chapter 2.2 the required parameters have been mathematically modelled to build up and provide dynamic, robust, compact as well as reliable evaluations.

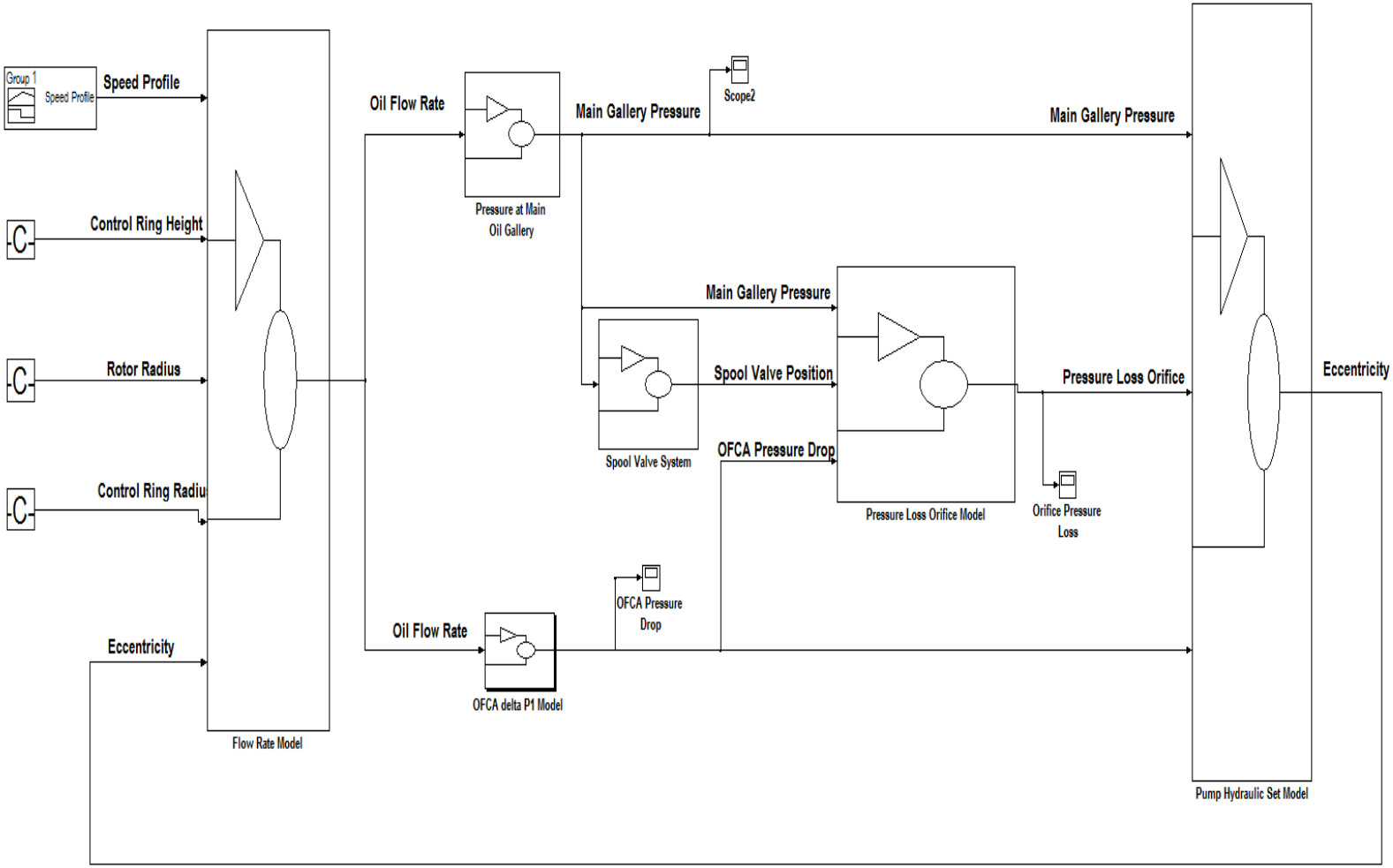

Figure 2.12 : MATLAB/SIMULINK Model of VDOP.

Explained equations and relations have been inserted to the MATLAB/SIMULINK in order to solve the equations and simulate the system with different sets of parameters.. Most of the parameters in VDOP are related with each other thus the output of the each block inserted in the SIMULINK blocks connected to the related sub-block. Figure 2.12 shows the created MATLAB/SIMULINK model of VDOP. As seen on the figure 2.12 Oil pump Speed, Control Ring Height, Rotor Radius and Control Ring Radius are basic design parameters and provided to the model as inputs. When the model starts to run it first calculates Flow rate at the default maximum eccentricity. With the calculated oil flow rate is enters to Pressure at Main Gallery and OFCA deltaP blocks to evaluate main gallery pressure and OFCA pressure loss by using the polynomial functions which is given in figure 2.5 and figure 2.7 respectively. Main gallery pressure is used as an input for the spool valve model, pressure loss on orifice and pump hydraulic set. OFCA pressure loss is used as an input for OFCA pressure loss and Pump hydraulic set.

In spool valve model created by using equation 2.6. Figure 2.12 shows the subnet of MATLAB/SIMULINK block of "Spool Valve Model".

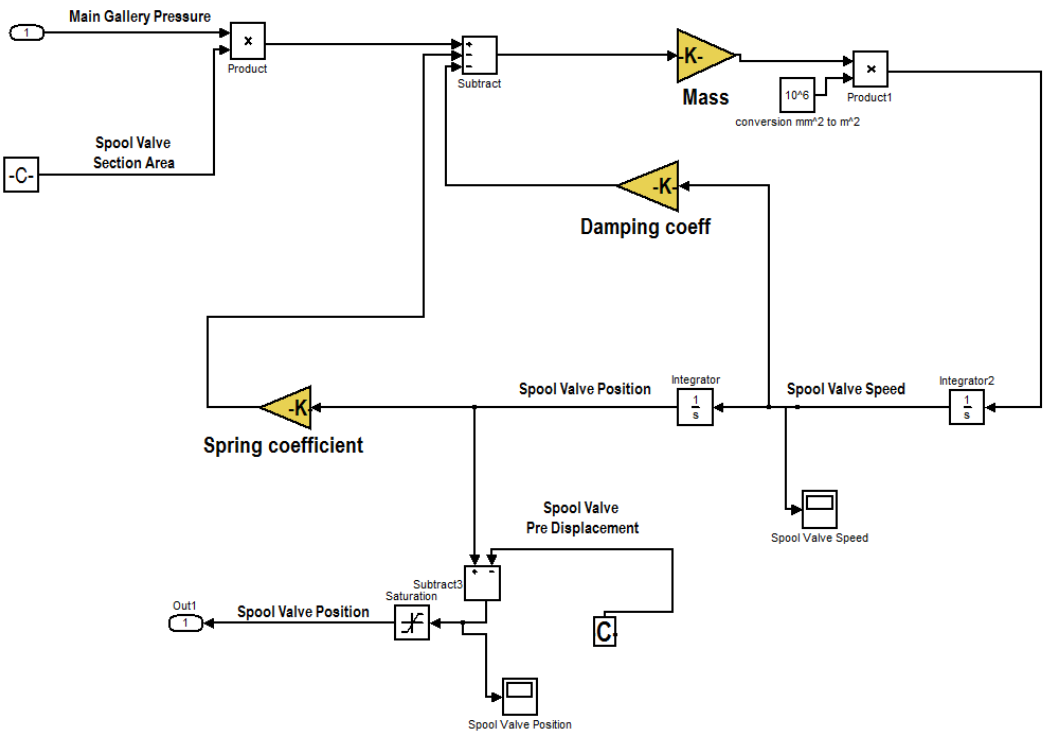

Figure 2.13 : MATLAB/SIMULINK model of Spool Valve.

As seen on figure 2.13, the Spool Valve Block uses main gallery pressure as an input to evaluate the force created by this force. In real engine the pressure in main gallery

is transmitted by a feed back pipe by transferring a small portion of oil back to the pump. Model uses the force equillibrium between the force due to the main gallery pressure and the spring. The spool valve speed is then calculated by integrating the acceleration of the valve with an integrator block. A part from oil pressure and spring forces, viscous damping forces are excerted on the valve, thus, a feedback gain block is created to evaluate this after the first integrator. The spool valve position is then calculated by integrating the speed of the valve. As this block is created to provide the spool valve position on the valve opening circle calculated position is saturated from 0 to opening diameter dimension of the spool position. Spool valve position together with main gallery pressure and OFCA pressure drop is then enters the "Orifice Pressure Loss Block". In this block the firstly the oil pump outlet presure is calculated with the help of Main gallery pressure and OFCA pressure drop. Then the pressure drop is evaluated by the iteration of equations 2.12 and 2.13.

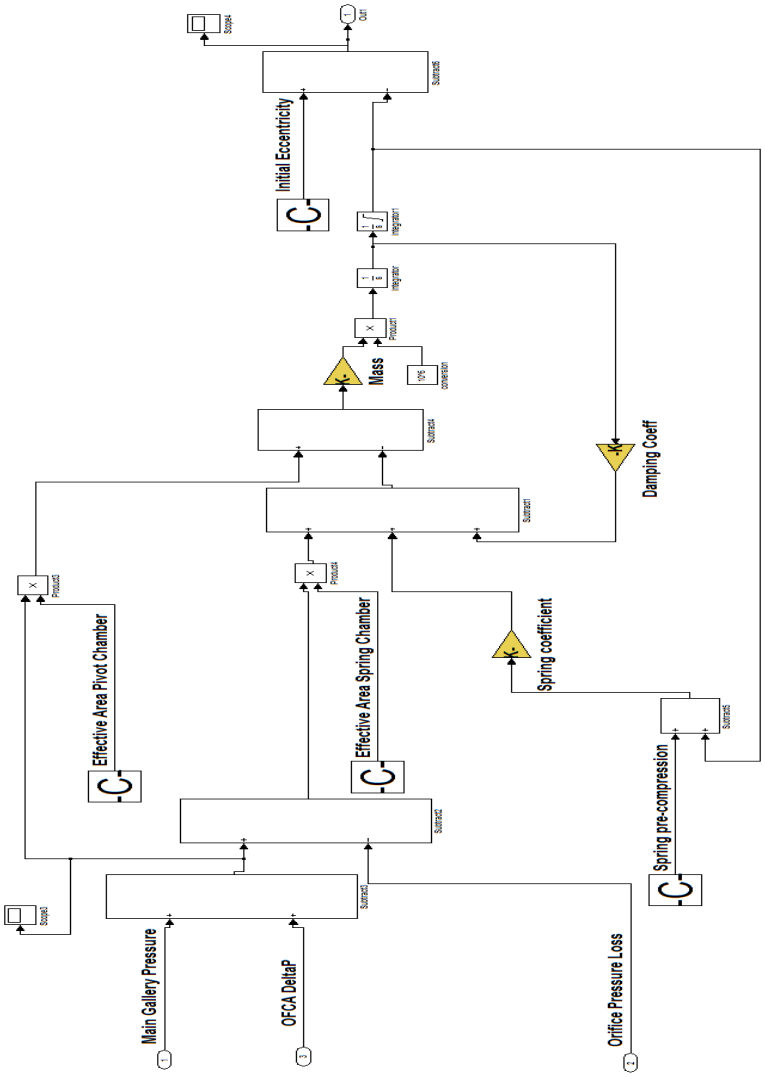

Figure 2.14 : MATLAB/SIMULINK Model of Hydraulic Set.

Figure 2.14 shows the “Pump Hydraulic Set” block where the eccentricity is calculated as an output. From this point of view this hydraulic set is the most important part for the variable operation. This block represents equation 2.1 as mentioned in the previous chapters. Pump outlet pressure is evaluated by adding OFCA pressure drop to main gallery pressure.For the spring chamber pressure the the pivot chamber pressure the calculated orifice pressure drop is subtracted from pump outlet pressure. Spring used in the hydraulic set is pre compressed to keep the control ring in the maximum eccentric position so that a constant pre load has been added to system. The speed of the chamber is evaluated by integrating the acceleration value and the speed is used to evaluate the viscous damping force which declerates the control ring motion. The position of control ring is then computed by integrating the speed value by an integrator block. As a restriction of pump geometry the control ring can move from 0 to maximum eccentricity so that in the integrator block this is represented with a saturation information.

3. RESULTS AND DISCUSSIONS

3.1 Objectives

This chapter mainly focus on the simulation strategy of the VDOP model which is explained in details in chapter 2. As a basic property of VDOP the oil flow and pressure developed in the system should increase linearly with the increasing speed until a certain pressure and speed if the other parameters such as viscosity, temperature, circulating fluid etc. is kept constant. After this certain speed and pressure point fluid flow rate and pressure is kept constant by hydraulic and mechanic contribution of the sub-systems in VDOP. Firstly a linearly increasing speed profile is fed to the developed model and simulation results of main gallery pressure obtained from MATLAB/SIMULINK model have been compared with the test data. Outputs of the sub-systems have been determined and discussed in details.

3.2 Model Verification

As a first step, model has been tested with a conventional speed profile which has been determined with the engine operating speed range. As a second step the real speed data taken from the engine test has been given as input and results have been verified.

3.2.1 VDOP model performance with conventional speed profile

Figure 2.12 shows the overall view of the system with inputs and sub-systems. The speed profile is a very important parameter to which flow rate and the pressure generated on the system is strongly dependent on. As the Diesel engines operating range is between 700 and 4000 rpm engine speeds oil pump model has been simulated with a linearly increasing speed which changes from 800 and 5000 rpms to cover the normal operating range of Diesel engines. Input speed has been saved on the workspace during the simulation and has been plotted. Figure 3.1 shows speed profile input which is fed to the system.

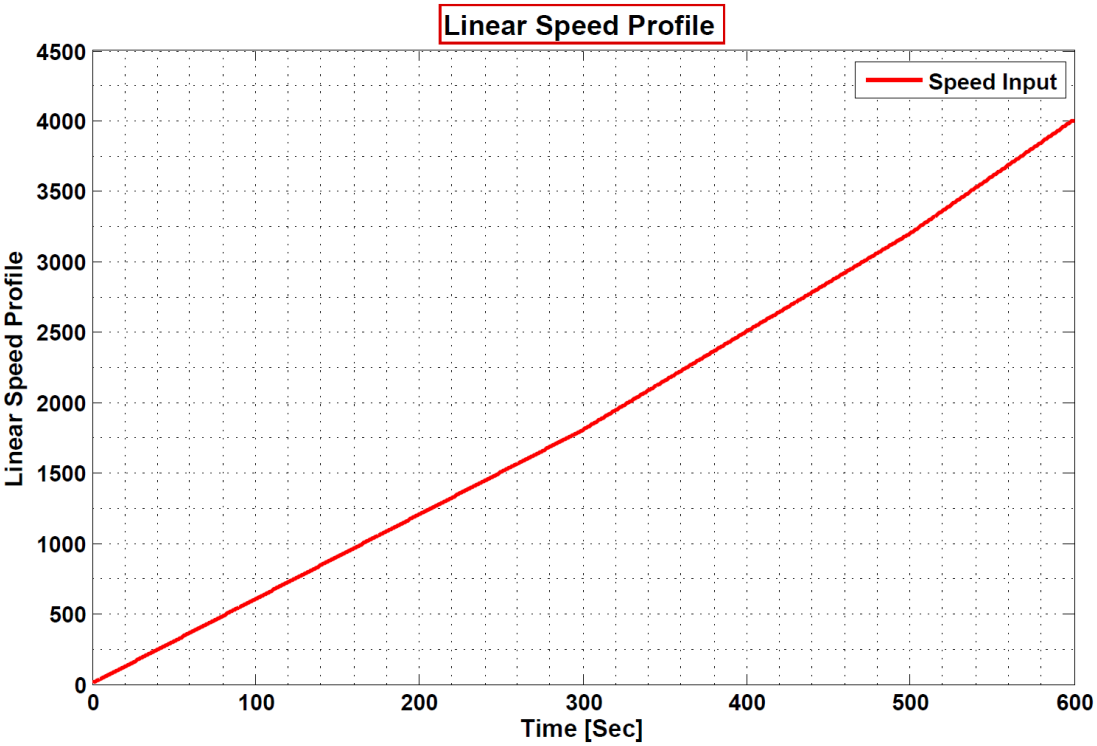

Figure 3.1 : Speed input to the MATLAB/SIMULINK model.

As seen on figure 3.1 total simulation duration is 600 seconds. At the beginning of the simulation (at 0th second) speed input is 700 rpm and at the end of the simulation (600th second) 4000 rpm.

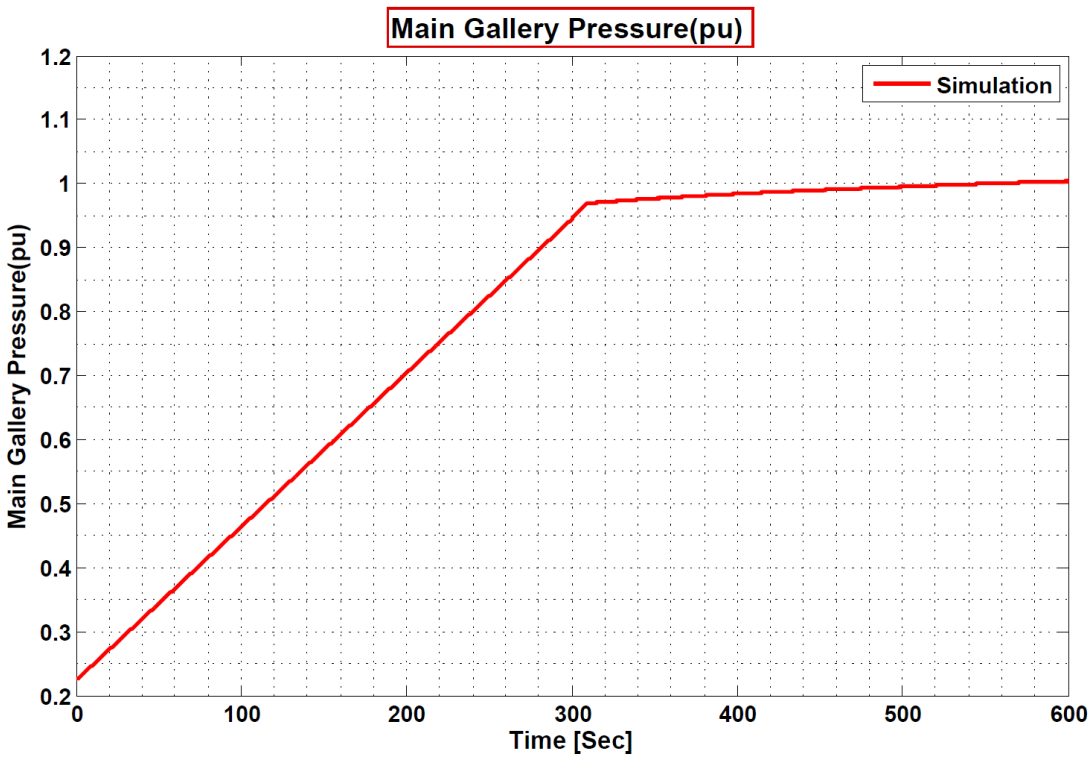

Figure 3.2 : Simulated main gallery pressure with the linear speed input.

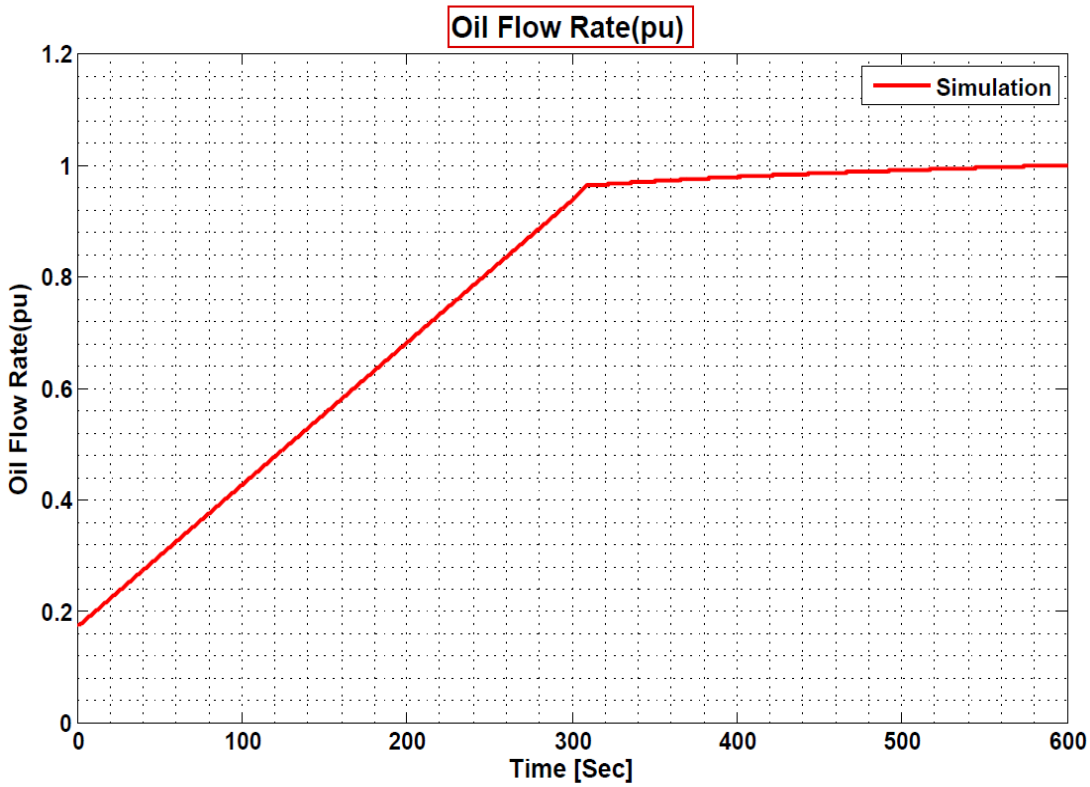

Figure 3.3 : Simulated main gallery pressure with the linear speed input.

In conventional fixed displacement oil pump theoretically with a linear speed input the oil pressure and oil flow rate increases linearly on the other hand in VDOPs oil flow rate and oil pressure should stay constant when a pre-determined oil pressure is reached where the feed-back is taken from to the pump.

Figure 3.2 and figure 3.3 show the main oil gallery pressure and oil flow rate delivered by the pump to the system. As seen on figure 3.2 oil pressure increases linearly until 300th second at which the input speed is 1800 rpm. After this point the oil pressure track off from the linear trend and tending to decrease the pressure increase rate and finally the pressure on the gallery sets to a constant value as a result of decrease on the oil flow rate delivery to the system which is illustrated in figure 3.3. As mentioned previously a very small amount of oil at the main gallery is transferred to the pump's spool valve system and pressure increase on the feedback system moves the spool and later when the pressure in front of the spool valve reaches a predetermined value the spool valve passes near the opening hole which led the oil flow from pump outlet through restrictor to the valve opening. This mechanism was explained in figure 2.8. In this simulation as the main gallery pressure and the oil flow rate has a corner point at 300th second since the spool valve

hole starts to move and let the oil flow as explained. Figure 3.4 show the spool valve position at the opening hole. The beginning of the opening hole is taken as a base line.

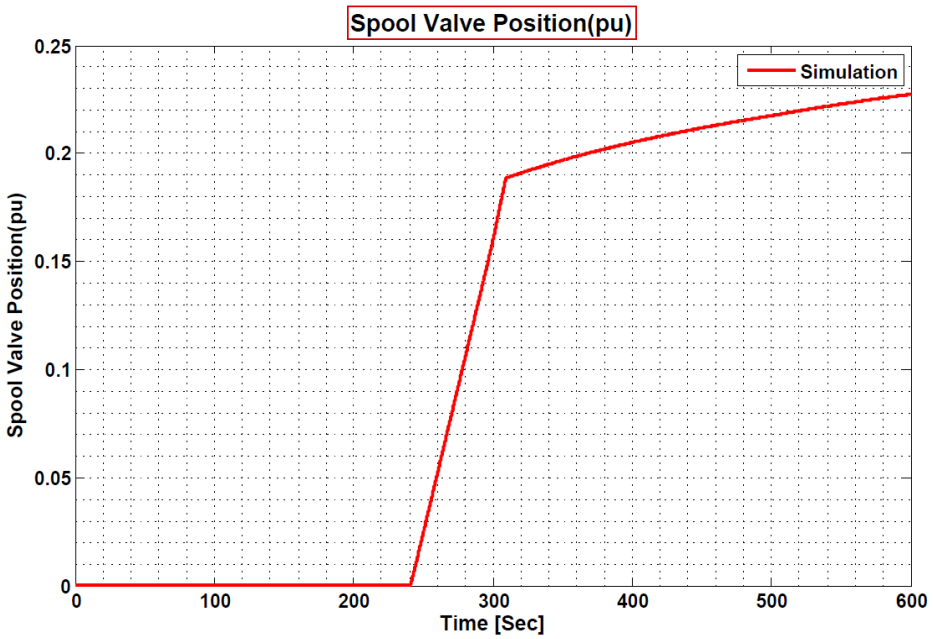

Figure 3.4 : Simulated spool valve position with the linear speed input.

As seen on figure 3.4 the spool valve is above the opening hole which prevents oil flow from oil pump outlet until 240th second. Then the opening hole starts to increase with the spool valve position however between 240th and 300th seconds the valve opening is very small which means oil flow rate through the restrictor is lower so it does not generate required pressure drop through the restrictor.

The main purpose of the spool valve system is to excite the pump hydraulic set by changing oil pressure through the restrictor. When the oil pressure drop across the restrictor is very low the oil pressure at the spring chamber does not decrease to the required value to move the control ring to the spring side.

Figure 3.5 shows the eccentricity in other terms, the control ring position. At the initial state as the system need maximum oil flow, the eccentricity of the control ring is at maximum. Eccentricity does not change until the drop to spool position shown in figure 3.4 reaches to a point so that it lets required oil flow to produce desired pressure drop on the restrictor. After this certain pressure the eccentricity of the control ring decreases to compensate the speed increase and to keep the oil pressure constant.

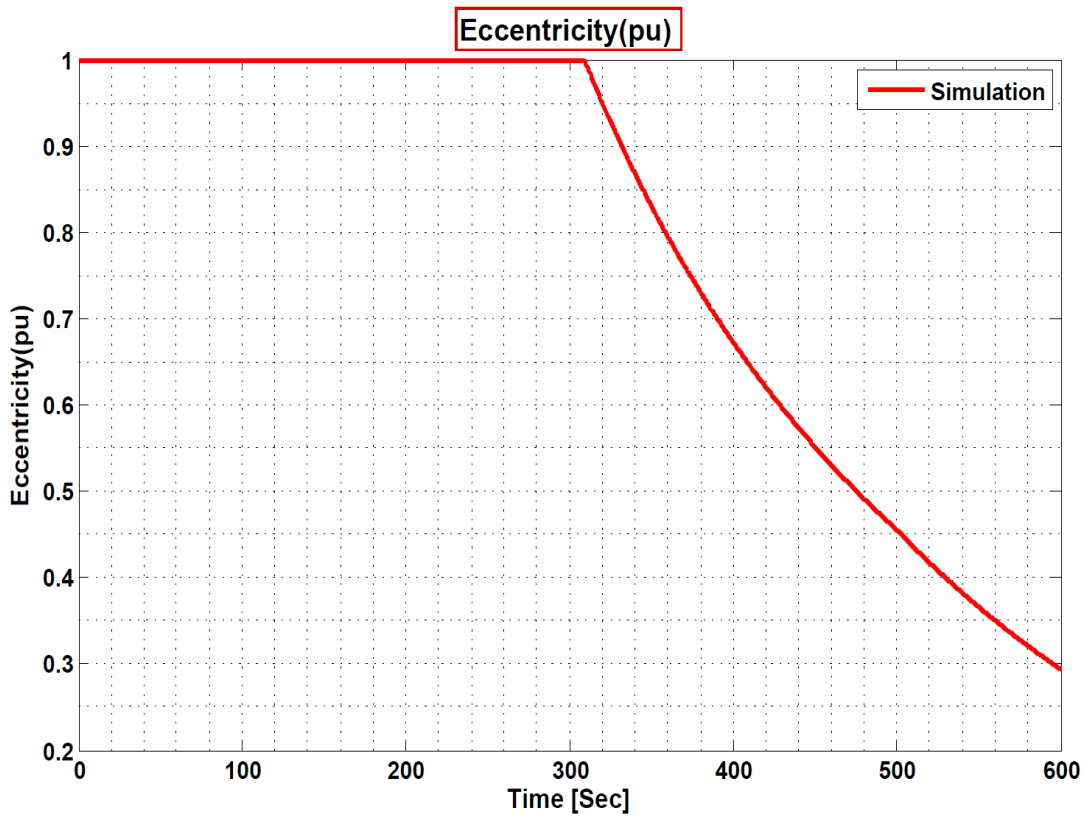

Figure 3.5 : Simulated eccentricity of hydraulic set with the linear speed input.

Eccentricity of the VDOP is a very important physical design parameter since it arranges the oil flow rate delivery to the system by the pump. In other words it determines the pumps displacement. In this simulation, the pump eccentricity started to move to spring chamber side at 300th second of the simulation at 1800 rpm and dropped to 0.3 at 600th second at 4000 rpm. One can say that this pump parameters including eccentricity are capable to work at engine operating speed ranges. Moreover developed model has a good representation of the pump sub- system.

3.3 Experimental Study and Model Validation

At the previous part the model is run with a linear speed input. Another validation of the system has been performed with the results of engine dynamometer test. In this dynamometer test engine is running in different speeds and loads at the operating range. Needed subsystems are instrumented for required temperature, acceleration, and pressure etc. data. In terms of lubrication system oil pressure and temperature are measured and recorded.

The oil temperature is measured with a K- Type thermocouple from both oil sump and main oil gallery. Oil pressure is measured from main oil gallery with AVL SL31D-2000 pressure sensor. Oil pressure and temperature data are measured and recorded each second of the test.

The 600 second duration of the speed data has been provided from dynamometer test results and given as an input to the MATLAB/SIMULINK model by importing data from Excel document by signal builder. Figure 3.6 shows the speed profile acquired from the engine dynamometer test.

As seen in figure 3.6 speed sweeps between 800 rpm and 3000 rpm which would result in variation in both oil flow and oil pressure values as a result of the pump subsystems' outputs.

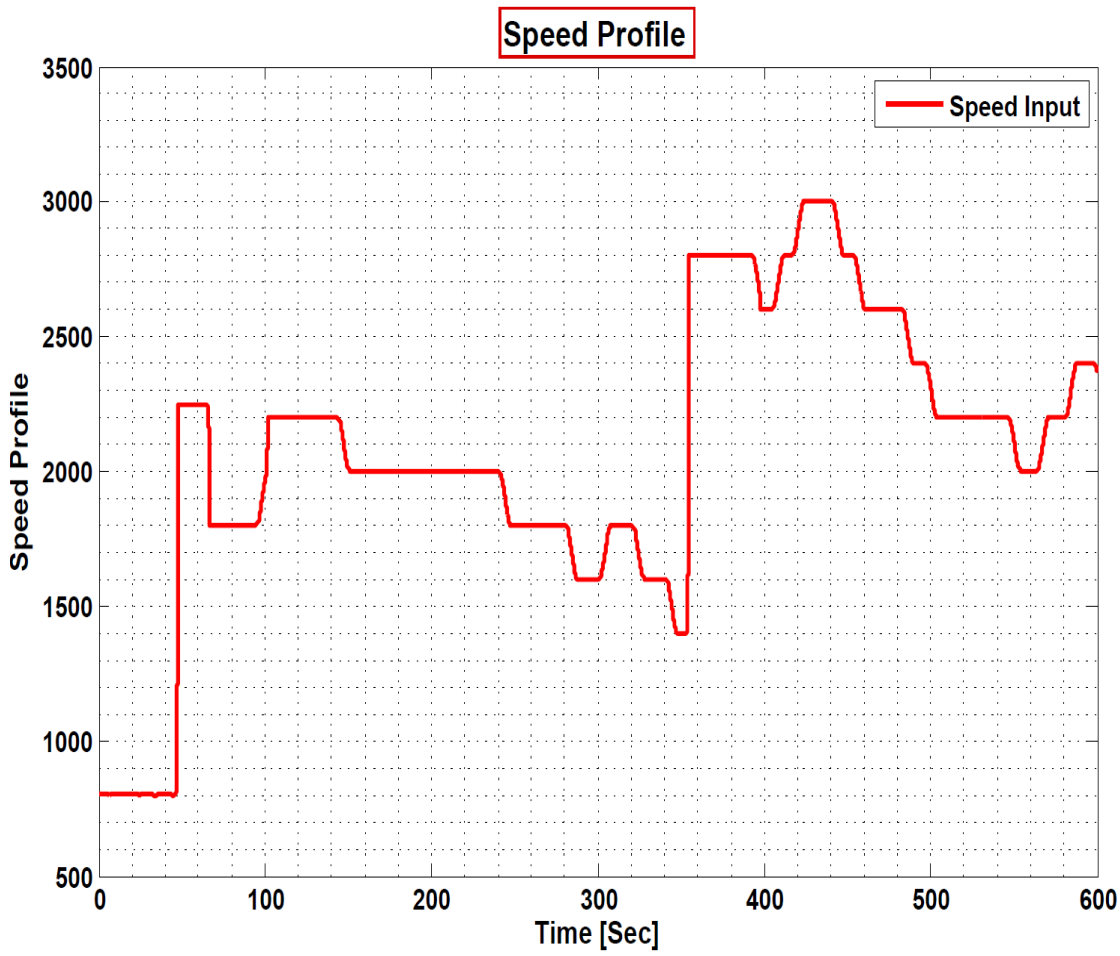

Figure 3.6 : Speed profile provided from dynometer test.

Figure 3.7 shows the comparison of the main gallery oil pressure response of the model to the speed profile given in figure 3.6 and recorded main gallery pressure data obtained from engine dynamometer test. As seen on figure 3.7 oil pressure data

does have a proportional relation with the speed profile at only lower speed at which the gallery pressure is lower than 1 pu oil pressure.

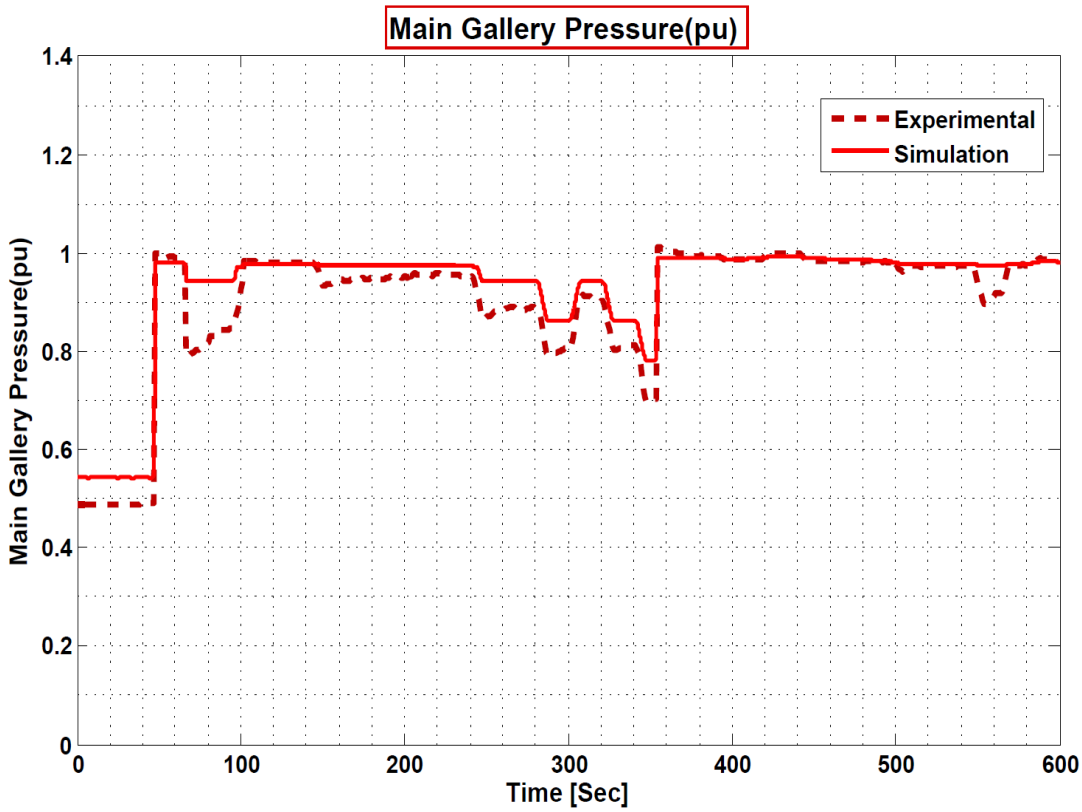

Figure 3.7 : Main gallery pressure comparison of simulated and experimental data.

As previously discussed the oil pressure reaches predetermined value at arround 1800 rpm speed. Applying this rule into this system between 40th and 250th seconds the input speed is partially higher than 1800 rpm and between 360th and 600th seconds totally higher than 1800 rpm. Both experimental and simulation results are aproaching to 1 pu value where the speed is higher than 1800 rpm

As seen on figure 3.7 experimental and simulation results has a good alignment in time domain(0 to 600 seconds).

On the other hand a small difference is observed with the experimental results.This small amount of difference can be attributed to varios factors; however, the basic reason could be absence of the the leakage flow in the model. On the other hand the change of the physical and chemical properties as well as external noise effects and data aqusition faults could also affect the results.

Figure 3.8 shows the oil flow rate data which is obtained from simulation. As seen from this figure the oil flow rate has same trend with the oil pressure data as

expected since the oil flow rate delivered to the engine system is linearly proportional to the oil pressure generated on the engine system.

Similar with the main gallery pressure characteristic oil flow rate approaches to 1 pu value between 40th and 250th seconds and 360th to 600th secont where the input speed is higher than 1800 rpm.

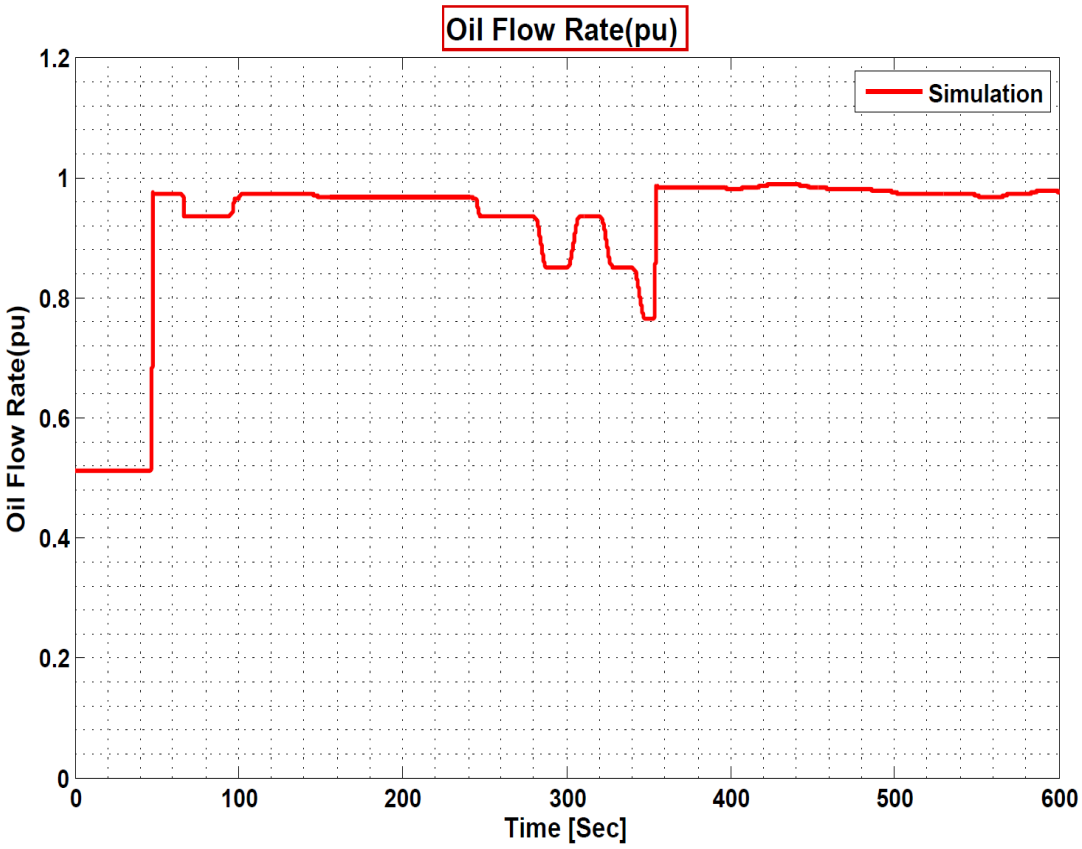

Figure 3.8 : Oil flow rate delivered by the VDOP.

Figure 3.9 shows the simulation results for the spool valve position of the VDOP during the test.

As seen on figure 3.9 the spool valve opening is zero at the beginning of the test (0th to 40th seconds) since the oil pressure is below the pre-determined value. Then since the speed is suddenly increased the oil pressure spool valve moves and opens the hole to 0.2 pu value where the pressure is set to 1 pu value. Later the speed drops below 1500 and the spool valve closes the opening hole accordingly.

At the second stage (between 350 th and 600 th seconds) the speed again increases above 1800 rpm and sweeps between 1800 rpm and 3000 rpm. Similarly valve moves accordingly and opens the hole to 0.2 pu value.

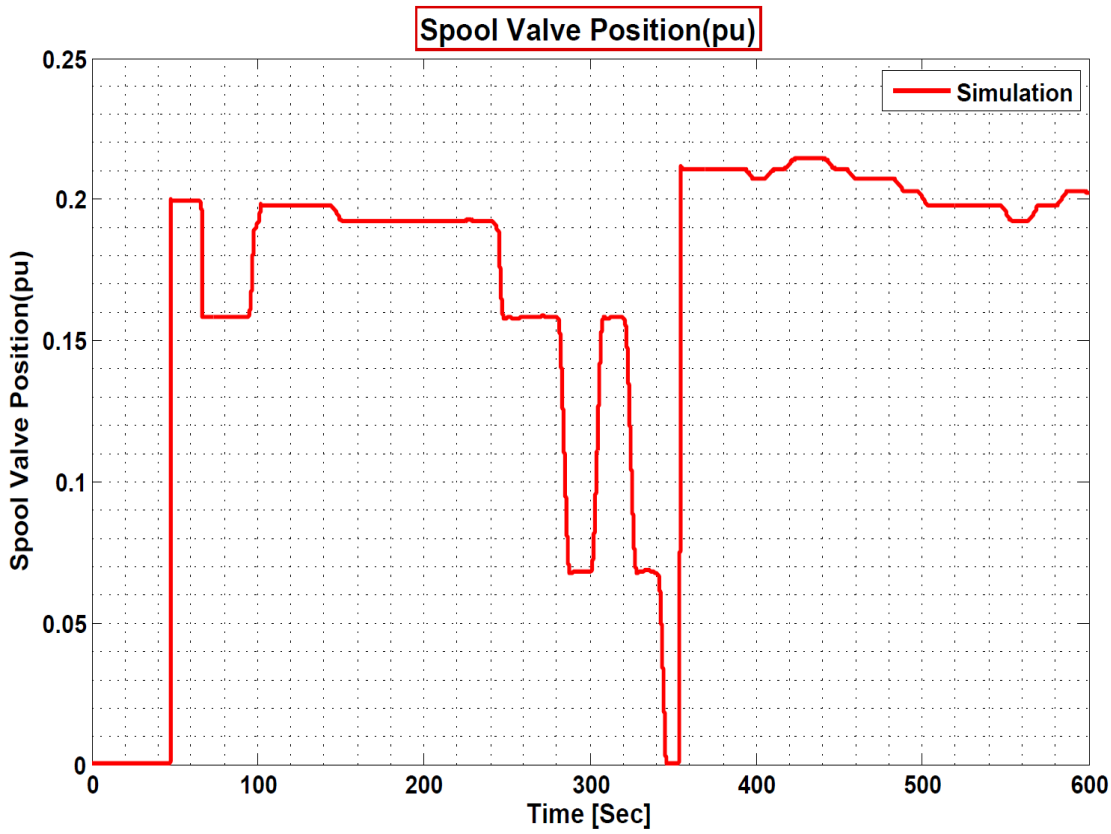

Figure 3.9 : Simulated spool valve position with the experimental speed input.

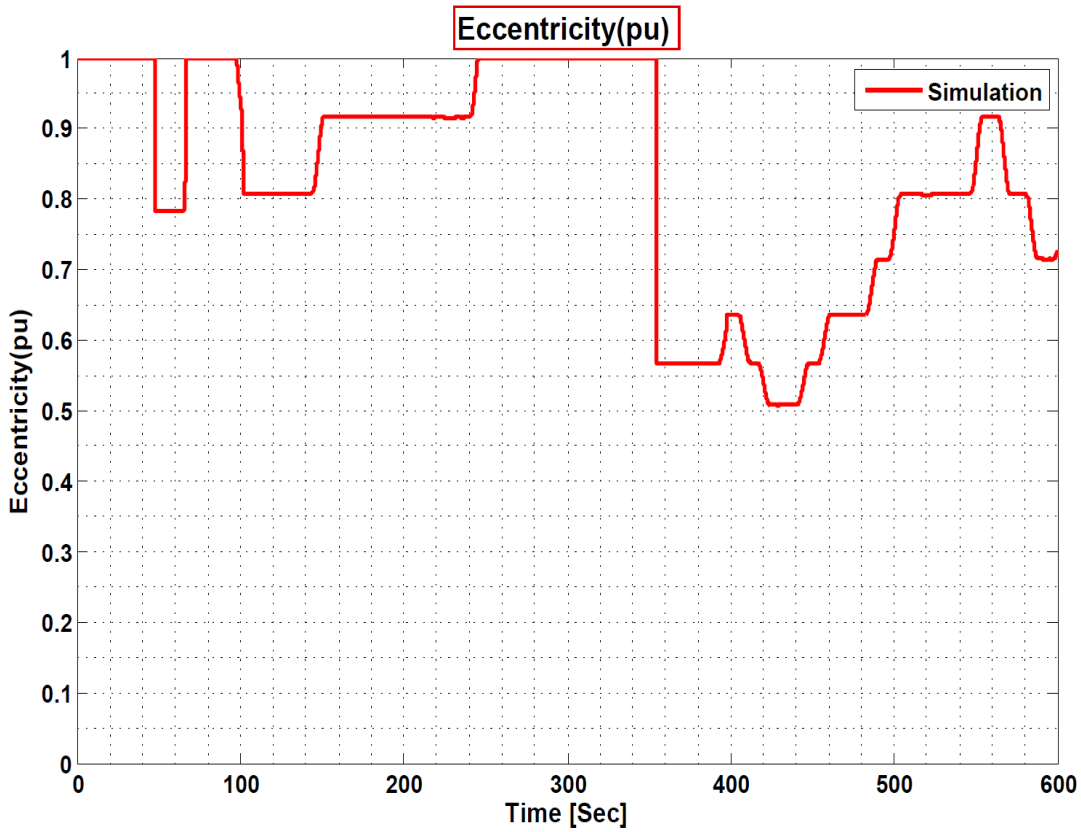

Figure 3.10 : Simulated eccentricity with the experimental speed input.

Figure 3. 10 shows the eccentricity of the control ring with the experimental speed data input. Since the oil pressure is lower than 1800 rpm and no flow through the spool valve opening as it is closed (0th to 40th seconds) the VDOP works at maximum eccentric position. When the oil pressure increase and the spool valve opens the opening hole the eccentricity tends to decrease. However decrease rate is strongly related with the spool valve opening and speed. At high speed as the oil pressure has tendency to increase the eccentricty decreases more rapidly to very lower values.

3.4 Sensitivity Analysis

In order to understand the effect of sub-systems of the pump on the output of the oil pump which is main gallery pressure, a sensitivity analysis has been performed. Spool valve spring, control ring spring, orifice diameter are the parameters that are expected to make a great contribution to the output pressure of oil pump as any change on these parameters would result in a different characteristic of the pump.

For Each parameter the simulation is run taking the base/original value, 0.5,1.5 and 2 fold of the base value.

A linear speed profile is fed to the system as an input which starts with 0 rpm and finishes with 3000 rpm within a 50 seconds duration.

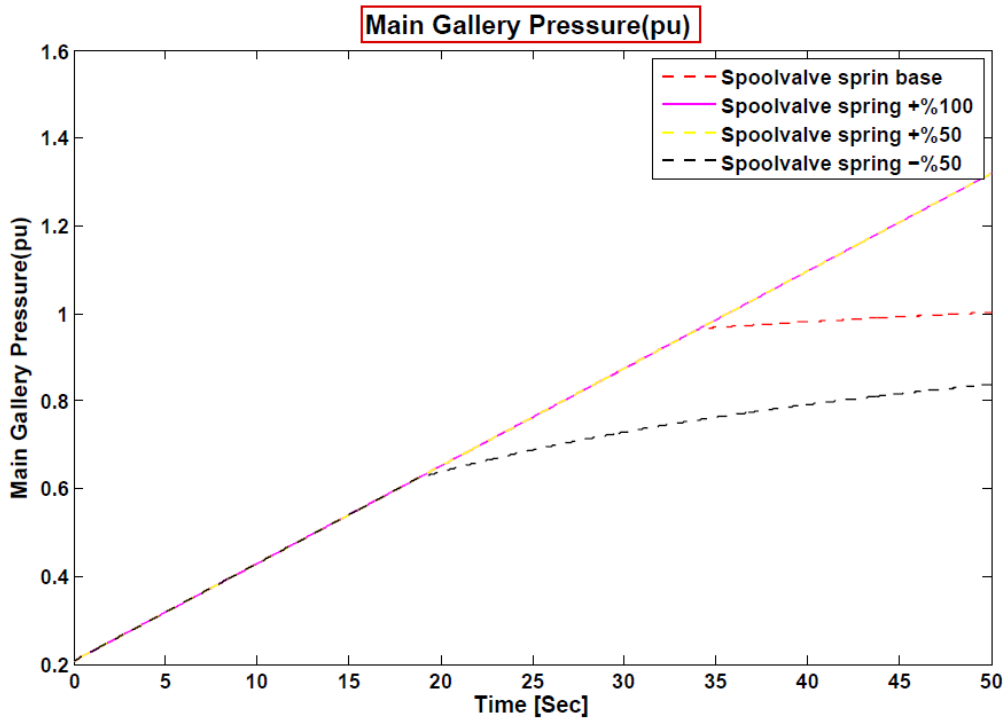

Figure 3.11 : Change of main gallery oil pressure with the variation of valve spring.

Figure 3.11 shows the sensitivity analysis regarding the spool valve spring coefficient. As seen on the figure, when the value of the spool valve spring is half of the base value, the oil pressure regulation starts at an earlier point and the main gallery pressure could not be reached to the desired 1 pu value.On the other hand, when the 1.5 and 2 times of the base spring value is given to the model, the spool main gallery oil pressure shows a linear trend. In other words no regulation is achieved. This could be due to the high pressure drop across the spool valve opening as the pressure drop on the spool valve is strongly influenced by the spool position on the valve opening. When a larger value of a spool valve spring is used on the system, the opening length will decrease accordingly which could result in a linear characteristic of main gallery pressure.

Figure 3.12 shows another sensitivity analysis for hydraulic chamber spring.

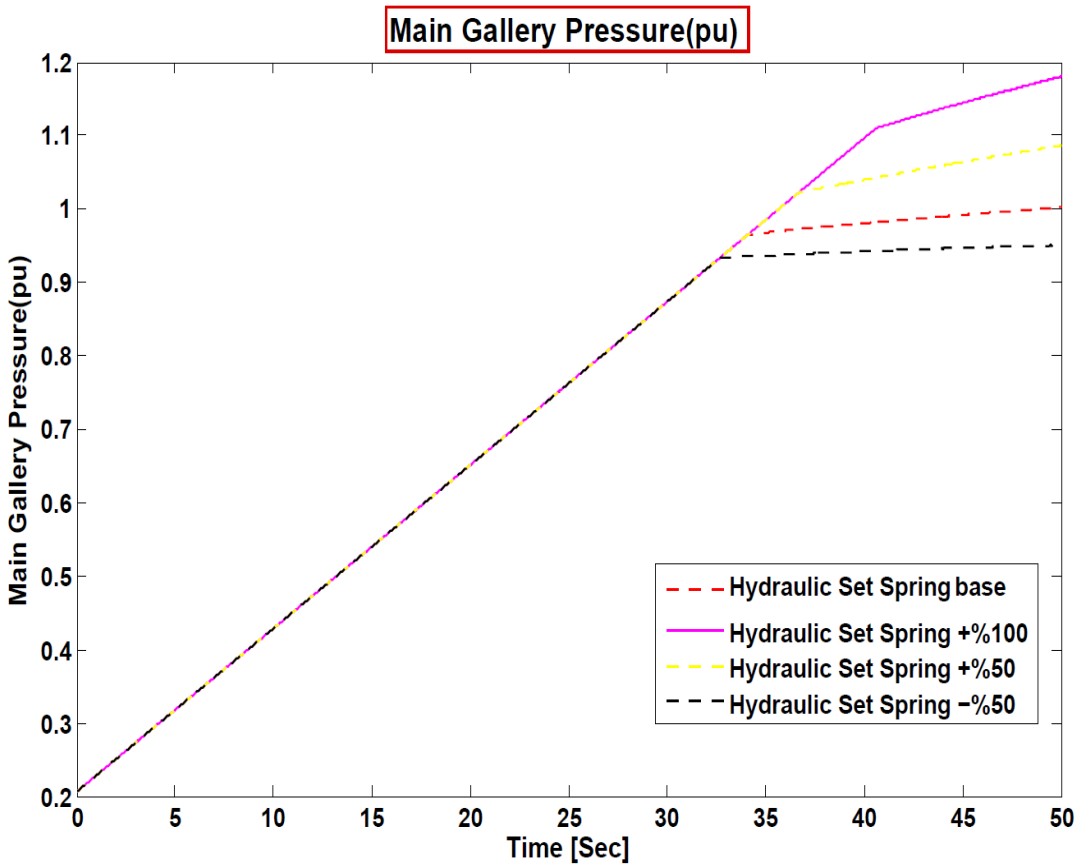

Figure 3.12 : Main gallery pressure with the variation of control spring coefficient.

Hydraulic chamber spring is another parameter which needs to be determined during the design stage and has a big effect on the main gallery pressure settling value. To understand the effect of hydraulic chamber spring coefficient on the main gallery oil pressure as seen in figure 3.12 main gallery pressure is set to a constant value 1 pu

and 0.93pu for base and half of the base value of the hydraulic set spring respectively. As the spring coefficient increases (1.5 and 2 fold of the base value) the settling point increases as the increase on the pump control ring spring coefficient contributes to increase on the eccentricity of the pump.

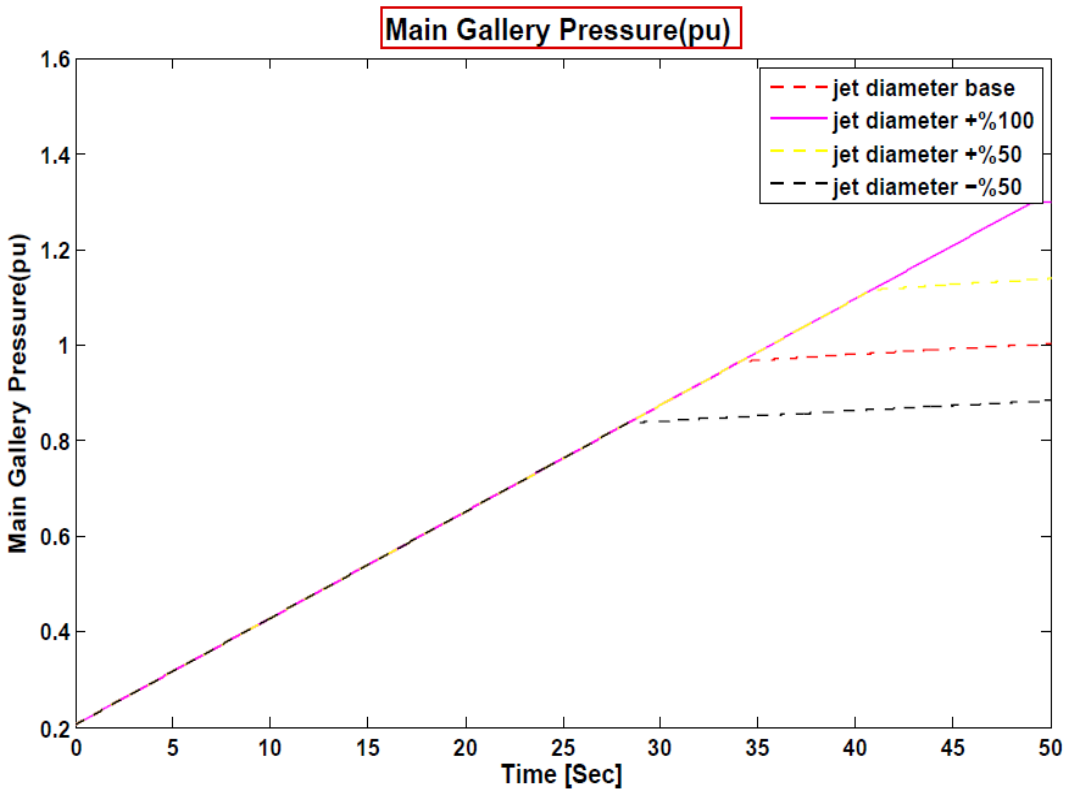

Figure 3.13 : Main gallery pressure with the variation of jet diameter.

Figure 3.13 shows the main gallery oil pressure with different values of jet diameter(base,0.5,1.5 and 2 folds of the base value).

As seen on figure 3.13 when the jet diameter is half of the base value, the main gallery settling pressure decreases since the decrease on the jet diameter causes increase in the orifice pressure loss which will then reduces the oil pressure force on the control ring spring side. When the force on the control ring spring side decreases, the pump operates more concentric and the main gallery pressure drops. Similarly, when the jet diameter increases the oil pressure drop on the orifice decreases which causes the main gallery settling pressure to increase. When the jet diameter is selected as two times of the base value, the required pressure drop on the orifice is not met and the main gallery oil pressure increases linearly which means pump may not operate as a variable displacement oil pump if the orrifice diamater increases to a higher value.

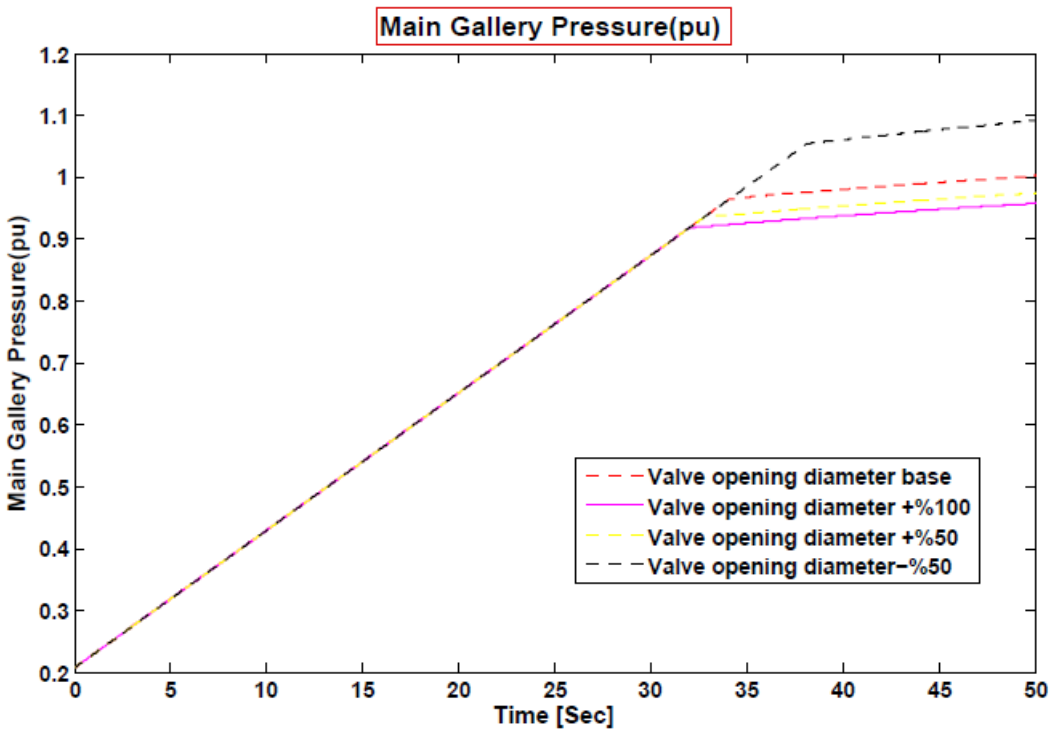

Figure 3.14 : Main gallery pressure with the variation of opening diameter.

Regarding opening diameter effect on the main gallery pressure, similar with the variation of the previous parameters the model has been simulated with different valve opening diameter (base, 0.5, 1.5, 2 fold of the base value). Valve opening diameter has an opposite effect that observed with the orifice diameter. When the opening diameter increases, the pressure drop across the opening decreases and pressure drop across the orifice increases which causes oil pump to operate at lower eccentricity.

4. CONCLUSION AND RECOMMENDATIONS

In this study a design stages and all subparts of a VDOP is discussed. There are various types of VDOP are used in the industry however as a scope of the project this work deals with hydraulically controlled vane pump. VDOP mainly consists of a hydraulic set where the eccentricity of the pump is arranged by the force equilibrium of the oil pressure and spring, a restrictor which provides pressure drop to excite the control ring on the hydraulic set, a spool valve which set the pump to a required pressure and feed-back line which transmits the flow to the spool valve from the system. A MATLAB/SIMULINK model is developed which includes all of the sub components of VDOP. All of the relations between these subsystems have been determined and connected to the related sub-block.

Firstly oil pumps flow rate have been determined as a function of constant design parameters and eccentricity as well as the pump/engine speed. This is achieved by the geometrical relations between rotor, vanes and control ring chamber. As a first step a function of a vector from rotor centre to control ring have been determined and determined functions is discretized to evaluate the area and then the volume between two adjacent chambers.

Secondly oil pressure response of the system to arbitrary oil flow rates have been modelled by using lube survey test of the engine. The pressure on the main gallery has been modelled with respect to oil flow rates delivered to the system. A linear relation between main gallery pressure and oil flow rate is obtained and used in the model. Similarly regarding OFCA pressure drop an ISO test has been run and the OFCA is modelled with respect to oil flow rate.

Spool valve has been modelled by the force equilibrium of main gallery pressure and regulation spring. Damping effect of the oil at the spool valve system has also been contributed in the model system responses have been obtained.

Spool valve opening hole and restrictor have also been modelled in a separate block. Pressure drop across the spool valve hole has been modelled with Poisseulle flow

which is derived from Navier-Stokes equations. Flow through the restrictor has been modelled with the orifice equations. The discharge coefficientsof the orifice is obtained from Wuest curve assuming the flow turbulent flow through the restrictor. The pressure sourced from the oil pump outlet is assumed to be distributed through restrictor and valve opening. The pressure drop distribution is modelled by equating the flow rate across them.

Hydraulic set inside the VDOP is modelled with the force equilibrium of the oil pressure on pivot chamber from one side and oil pressure at spring chamber and spring force at the other side. Damping forces also contributed and added to the model. As the forces are changes the eccentricity changes. At every solution step eccentricity is sent as a feedback data to the first block to evaluate the oil flow rate

Model has been run with a conventional linear speed profile. A scope block has been connected to every sub-system to record the data. Obtained data are then plotted separately. It has been understood that all sub-systems of the VDOP operates compatible with each other.

Engine dynamometer have been run with the modelled VDOP and main gallery pressure, speed and temperature data have been collected for 600 seconds. The speed data is then fed to the model at the same duration (600 seconds). Simulated and tested main gallery pressure data have been compared and a good alignment has been achieved.

As a conclusion a VDOP oil pump model which takes engine speed and constant oil pump parameters as input and provides oil flow rate on the pump outlet and through restrictors, oil pressure at pump outlet and main oil gallery as well as displacements of spool valve and control ring spring as an output. This model also provides a quick review of the pump response to a new designed VDOP by changing the constant parameters.

REFERENCES

[1] **Hoag, K. L., (**2006).Vehicular Engine Design, Wien, Austria, pp 140-160.

[2] **Mang, T., Dresel, W.,** (2007). Lubricants and Lubrication, 2nd edition, Weinheim, Germany p.14.

[3] **Totten, G. E.,** (2006). Handbook of Lubrication and Tribology, Volume I: Application and Maintanance, Taylor and Francais Group, U.S., 2006.

[4] **Frendo, F., Novi, N., Squarcini, R.,** (2006). Numerical and Experimental Analysis of Variable Displacement Vane Pump, International Conference on Tribology, Parma, Italy, September.

[5] **Manco, S., Nervegna, N., Rundo, M., and Armenio, G.,** (2004). Modelling and Simulation of Variable Displacement Vane Pumps for IC Engine Lubrication, SAE World Congress, Detroit, Mischigan, March.

[6] **Karmel, A. M.,** (1986). Stability and Regulation of a Variable-Displacement Vane-Pump, ASME, Warren, Michigan, June.

[7] **Milani, M., Paltrinieri, F., Tosetti, F., Bianchini, A., Ferrera, G., Ferrari, L.,** (2009). Design and Optimization of a Variable Displacement Vane Pump for High Performance IC Engine Lubrication, Part 2 Lumped Parameters Numerical Analysis, Detroit, Michigan, April.

[8] **Wang, M., Ding, H., Jiang, Y., Xiang, X.,** (2012). Numerical Modeling of Vane Oil Pump with Variable Displacement, SAE, April.

[9] **Barbelli, S., Bova, S., and Piccione, R.,** (2009). Zero-dimensional Model and Pressure Data Analysis of a Variable-Displacement Lubricating Vane Pump, SAE, Univeristy of Calibria, Italy, June.

[10] **Pierburg,** (2010). Oil Pump Presentation, pp.3-6 Gebze, Turkey, September.

[11] **Bo, L. T.,** (2008). Design and Control of a Variable Displacement Vane Pump for Valveless Hydraulic Actuation, PHD thesis in Mechanical Engineering, Nashville, Tennessee, December.

[12] **ISO 4548,** (1997). Methods of Test for Full-Flow Lubricating Oil Filters for International Combustion Engines, Part 2, International Organization for Standardization standard, September.

[13] **McCloy, D., Martin, H. R.,** (1980). Control of Fluid Power: Analysis and Design, *2nd edition*, John Wiley & Sons, New York.

[14] **Mucchi, E., Dalpiaz, G., Rincon, A., F.,** (2009). Elastodynamic analysis of a gear pump, *Part I: Pressure distribution and gear eccentricity,* Elsevier, Ferrara, Italy, February.

[15] **Jelali, M., and Kroll, A.,** (2003). Hydraulic Servo-Systems: Modelling, Identification, and Control, Springer, Düsseldorf, Germany,pp. 20-40

[16] **Khalil, M. K. B.,** (2008). Estimated versus Calculated Viscous Friction Coefficient in Spool Valve Modeling, IFPE Technical Conference, Broadway, Milwaukee.

CURRICULUM VITAE

Candidate's full name: EYÜP ÇELEBİ

Place and date of birth: KIRIKKALE 26.01.1986

Permanent Address: Kaletepe Mah. Alparslan Peh. Bulvarı 67. Sok No 32 KIRIKKALE

Universities and Colleges attended: B.Sc. Mechanical Engineering, İTÜ (2010)

B.Sc. Electrical Engineering, İTÜ (2011)

M.Sc. Mechatronic Engineering, İTÜ (2013)